Werkzeugsysteme // Tooling Systems

INDEX VDI40W

Mittelmaß / Center high

Angetrieben / Driven	Statisch / Static
110mm	110mm

INDEX
B400 ▪ B500 ▪ G250 ▪ G300.2 ▪ G320.2 ▪ G400.2 ▪ G420 ▪ G500 ▪ G520

TRAUB
TNA400.2 ▪ TNA500.2

EWS Tool Technologies

Bewegung, Schnelligkeit, Präzision – das ist die Welt von EWS. Wir nennen es „Precision meets Motion“, weil wir uns der Bedeutung von Präzision für die Zukunft unserer Kunden und Zielmärkte bewusst sind.

Höchste Qualitätsansprüche und größtes Engagement für die optimale Ausführung unserer Produkte in Form und Funktion stehen dabei im Mittelpunkt. Dafür investieren wir gezielt in modernste Fertigungslinien und entwickeln mit externen Instituten Methoden zur Qualitätssicherung.

Garant für unsere Spitzenleistungen in Entwicklung und Produktion ist dabei das hohe Ausbildungsniveau unserer Mitarbeiter.

Mit Kompetenz und Zuverlässigkeit möchten wir unsere Kunden in der Beratung, im täglichen Austausch und in der Projektabwicklung immer wieder von unseren Leistungen und unserem Service überzeugen.

Motion, speed, precision – this is the world of EWS. We call it “Precision meets Motion”, because we are aware of the importance of precision for the future of our customers and target markets.

Our focus is on highest quality standards and utmost commitment to ensure an optimal design of our products in form and function. For this purpose, we systematically invest in state-of-the-art production lines and develop methods for quality assurance in cooperation with external institutions.

Our top performance in development and production is backed up by the high level of training of our staff members.

Competence and reliability in our advisory services, our daily communication and project management – these are the core elements convincing our customers of our performance and services over and over again.

EWS
Tool Technologies

EWS.Varia VX4

Das Wechselsystem für sicheres und schnelles Rüsten!

The change system for safe and quick setup!

Varia Katalog / Catalogue

Produktvideo

Product video

Start Kit 1: VX4STARTKIT1

- 2x Spannzangeneinsatz ER32L30 (Nr.: 31.VX432L30)
  2x Collet insert ER32L30 (No.: 31.VX432L30)
- 1x Spannzangenschlüssel ER32 (Nr.: 232)
  1x Collet wrench ER32 (No.: 232)
- 2x Tool-Tags (Nr.: PT.VX4)
  2x Tool-Tags (No.: PT.VX4)
- 1x Drehmomentschlüssel (Nr.: DSV SW5/05.7NM)
  1x Torque wrench (No.: DSV SW5/05.7NM)
- 1x Montageblock (Nr.: MB-VX4)
  1x Mounting block (No.: MB-VX4)

Start Kit 2 „professionell“ : VX4STARTKIT2

- 1x T-Carrier TC-100 (Nr.: TP-100 VX4-20)
  1x T-Carrier TC-100 (No.: TP-100 VX4-20)
- 4x Spannzangeneinsatz ER32L30 (Nr.: 31.VX432L30)
  4x Collet insert ER32L30 (No.: 31.VX432L30)
- 1x Spannzangenschlüssel ER32 (Nr.: 232)
  1x Collet wrench ER32 (No.: 232)
- 1x Spannzangeneinsatz IM ER25L16 (Nr.: 31.VX425IML16)
  1x Collet insert IM ER25L16 (No.: 31.VX425IML16)
- 1x Spannzangenschlüssel für IM ER25 (Nr.: 225AX)
  1x Collet wrench for internal nut ER25 (No.: 225AX)
- 1x Adapter für Kombihalter Ø40 (Nr.: 19.40VX4-ZYL)
  1x Adapter for combi holder Ø40 (No.: 19.40VX4-ZYL)
- 5x Tool-Tags (Nr.: PT.VX4)
  5x Tool-Tags (No.: PT.VX4)
- 1x Drehmomentschlüssel (Nr.: DSV SW5/05.7NM)
  1x Torque wrench (No.: DSV SW5/05.7NM)
- 1x Montageblock (Nr.: MB-VX4)
  1x Mounting block (No.: MB-VX4)

SAMMELMAPPE ÜBERSICHT [1/1

Außendrehen

0

turning holder, right hand

MNR: 177923
1.4025G300RLIKW
Square 25

Internal coolant supply
W - seration (License INDEX)
Double serration (Lizenz Traub)

1

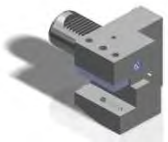

turning holder left hand

MNR: 213919
4.4025G300RLIKW
Square 25

Internal coolant supply
W - seration (License INDEX)
Double serration (Lizenz Traub)

2

turning holder, right hand

MNR: 213922
1.4032G400RLIKWL1=82
Square 32

Internal coolant supply
W - seration (License INDEX)
Double serration (Lizenz Traub)

3

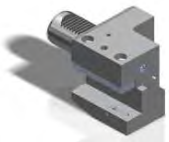

turning holder left hand

MNR: 213926
4.4032G400RLIKWL1=82
Square 32

Internal coolant supply
W - seration (License INDEX)
Double serration (Lizenz Traub)

4

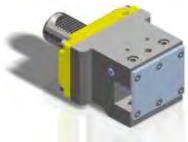

turning tool, right hand

MNR: 213931
5.4025G400RLIKWL1=107
Square 25

Internal coolant supply
W - seration (License INDEX)
Double serration (Lizenz Traub)

5

Abstechhalter

0

SAMMELMAPPE ÜBERSICHT [2/1

Infeed / Cut-off tool holder

MNR: S01574
32.4032G300RLÜKW
Size 32

W - seration (License INDEX)
double ser. Lizenz Traub, overhead

10

Innendrehwerkzeuge

0

MNR: 209188
17.4025G400RLW SA-MS

20

Combi holder for int/ext. cooling

MNR: S03030
17.4032G400RLW
hole -Ø 32 mm

W - seration (License INDEX)
Double serration (Lizenz Traub)

21

Combi holder for int/ext. cooling

MNR: S01999
17.4040G400RLW
hole-Ø 40 mm

W - seration (License INDEX)
Double serration (Lizenz Traub)

23

Combi holder for int/ext. cooling

MNR: S04267
17.4050G400WX100
hole -Ø 50 mm

W - seration (License INDEX)

24

Mitlaufende Zentrierspitze Hatlter MK2

0

SAMMELMAPPE ÜBERSICHT [3/1

Center point

MNR: 209445
47640G400RLW-S01

double seration (Lizenz Traub)

25

ReduzierhülsenDia40

0

Reducing sleeve

MNR: 111112
28.4008-32S-SATZ
hole -Ø 8 - 32 mm

201

Reducing sleeve

MNR: 136376
28.4006S
hole -Ø 6 mm

202

Reducing sleeve

MNR: 136377
28.4008S
hole -Ø 8 mm

203

Reducing sleeve

MNR: 136378
28.4010S
hole -Ø 10 mm

204

Reducing sleeve

MNR: 136379
28.4012S
hole -Ø 12 mm

205

SAMMELMAPPE ÜBERSICHT [4/1

Reducing sleeve

MNR: 136381
28.4016S
hole -Ø 16 mm

206

Reducing sleeve

MNR: 136384
28.4020S
hole -Ø20 mm

207

Reducing sleeve

MNR: 136385
28.4025S
hole -Ø 25 mm

208

Reducing sleeve

MNR: 136388
28.4032S
hole -Ø 32 mm

209

Reducing sleeve

MNR: 160321
28.4016S-GEW
hole -Ø 16 mm

210

Reducing sleeve

MNR: S04009
28.4020S-GEW
hole -Ø20 mm

211

Reducing sleeve

MNR: 163928
28.4025S-GEW
hole -Ø 25 mm

212

SAMMELMAPPE ÜBERSICHT [5/1

Reducing sleeve

MNR: 221278
28.4032S-M6
hole -Ø 32 mm

213

Reduzierhülsen Dia50

0

Reducing sleeve

MNR: 186442
28.5008-40S-SATZ

240

Reducing sleeve

MNR: 136491
28.5006S
hole -Ø 6 mm

241

Reducing sleeve

MNR: 136488
28.5008S
hole -Ø 8 mm

242

Reducing sleeve

MNR: 136489
28.5010S
hole -Ø 10 mm

243

Reducing sleeve

MNR: 136480
28.5012S
hole -Ø 12 mm

244

SAMMELMAPPE ÜBERSICHT [6/1

Reducing sleeve

MNR: 136481
28.5016S
hole -Ø 16 mm

245

Reducing sleeve

MNR: 136482
28.5020S
hole -Ø20 mm

246

Reducing sleeve

MNR: 136483
28.5025S
hole -Ø 25 mm

247

Reducing sleeve

MNR: 136484
28.5032S
hole -Ø 32 mm

248

Reducing sleeve

MNR: 136485
28.5040S
hole-Ø 40 mm

249

VARIA Statsich

0

Boring bar holder

MNR: 213891
19.40VX4G400RLWZ12
VXVX4

W - seration (License INDEX)
Double serration (Lizenz Traub)

30

EWS Group

SAMMELMAPPE ÜBERSICHT [7/1

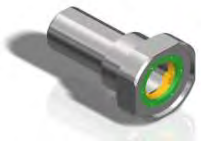

Boring bar holder

MNR: 209239
19.40VX4-ZYL
EWS Varia VX4 - Adaptor

31

VARIA Start Kit

0

MNR: 216493
VX4STARTKIT2

35

MNR: 216492
VX4STARTKIT1

36

AGW VARIA Axial

0

Axial drilling and milling head

MNR: 214142
40.40VX4KRG250IKCW
EWS - Varia X4 - Adaptor

i = 1:1 (input equal output)
5.000 1/min
25 Nm
IC/EC Ceramic pmax = 70bar

40

Axial drilling and milling head

MNR: 212687
40.40VX4KRG250IKC
EWS - Varia X4 - Adaptor

i = 1:1 (input equal output)
5.000 1/min
50 Nm
IC/EC Ceramic pmax = 70bar

41

SAMMELMAPPE ÜBERSICHT [8/1

Ax. drill. and mill. head offset

MNR: 209449
50.40VX4G250RLIKDI1W
EWS - Varia X4 - Adaptor

i =1:2 direction of rotation inver.
10.000 1/min
25 Nm
IC/EC Ceramic pmax = 70bar

42

Radiale AGW VARIA X110

0

Radial drill. and mill. head offset

MNR: 216744
80.40VX4KRG250RLIKDWX110
EWS - Varia X4 - Adaptor

i = 1:1 (input equal output)
6.000 1/min
50 Nm
IC/EC Ceramic pmax = 70bar

43

Radial drilling and milling head

MNR: 212692
60.40VX4KRG250RLIKDWX110
EWS - Varia X4 - Adaptor

i =1:1 direction of rotation inver.
5.000 1/min
50 Nm
IC/EC Ceramic pmax = 70bar

44

AGW Ohne VARIA

0

Axial drilling and milling head

MNR: 125441
40.4032G250IK
For collet 320 470E (ER32 Ø3-20)

i = 1:1 (input equal output)
6.000 1/min
25 Nm
Int. / ext. coolant pmax = 25bar

50

Radial drilling and milling head

MNR: 208319
60.4032G250RLIKDWX110
For collet 320 470E (ER32 Ø3-20)

i =1:1 direction of rotation inver.
6.000 1/min
50 Nm
IC/EC Ceramic pmax = 70bar

51

SAMMELMAPPE ÜBERSICHT [9/1

Radial drill. and mill. head offset

MNR: 216745
80.4032KRG250RLIKDWIMX110
For collet 320 470E (ER32 Ø3-20)

i = 1:1 (input equal output)
6.000 1/min
50 Nm
IC/EC Ceramic pmax = 70bar

52

Schwenkkopf / Swivel Head

0

Swivel head

MNR: 188420
63.4025G250RLIKDW
For collet 250 430E (ER25 Ø2-16)

i = 1:1 (input equal output)
6.000 1/min
16 Nm
IC/EC Ceramic pmax = 70bar

60

Swivel head

MNR: 139978
63.4025G250RLW
For collet 250 430E (ER25 Ø2-16)

i = 1:1 (input equal output)
6.000 1/min
16 Nm
External coolant supply

61

Spannschlüsselsätze

0

Wrench set

MNR: 220424
ER32

70

Wrench set

MNR: 220414
ER32IM

71

SAMMELMAPPE ÜBERSICHT [10/

Wrench set

MNR: 220353
ER25

72

Spannzangensätze

0

Collet

MNR: 140883
BG-322 470E NC SATZ-Ø3-20

Sealed

80

Collet

MNR: WS00023
BG-322 470E NC-ECDS-Ø3-20

Sealed

81

turning holder, right hand

Pos.: 1
MNR: 177923
KTXT: 1.4025G300RLIKW

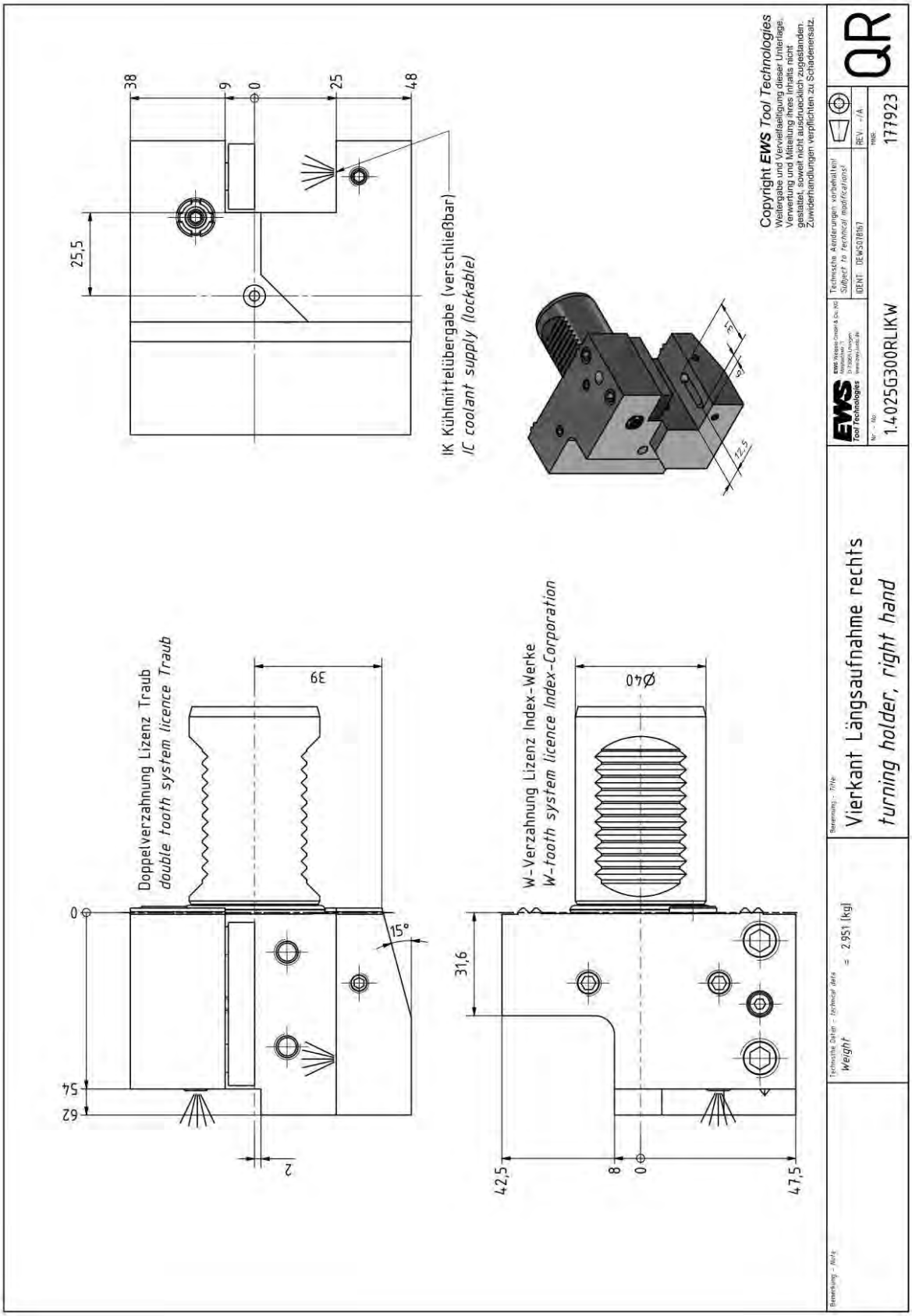

turning holder left hand

Pos.: 2
MNR: 213919
KTXT: 4.4025G300RLIKW

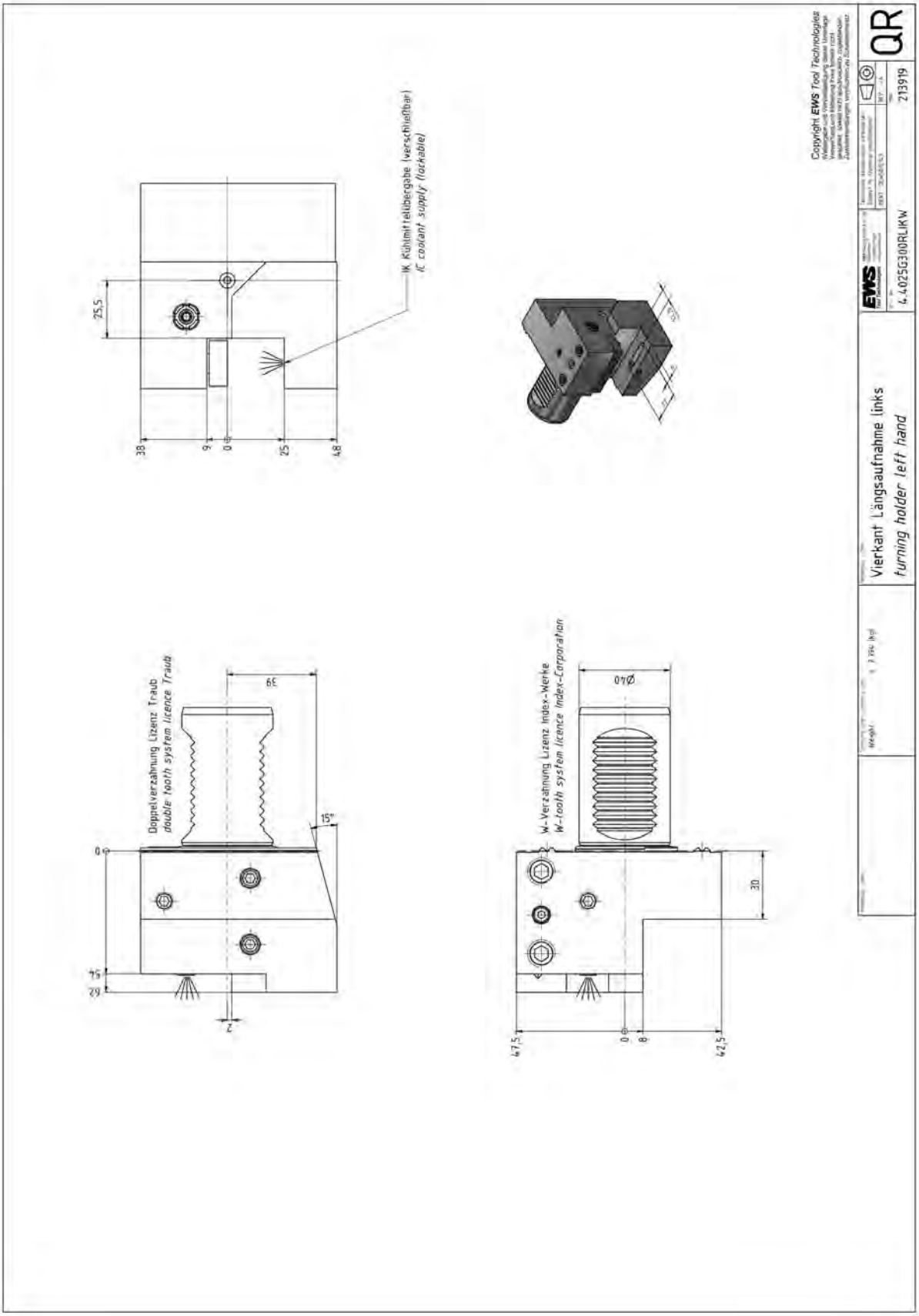

turning holder, right hand

Pos.: 3
MNR: 213922
KTXT: 1.4032G400RLIKWL1=82

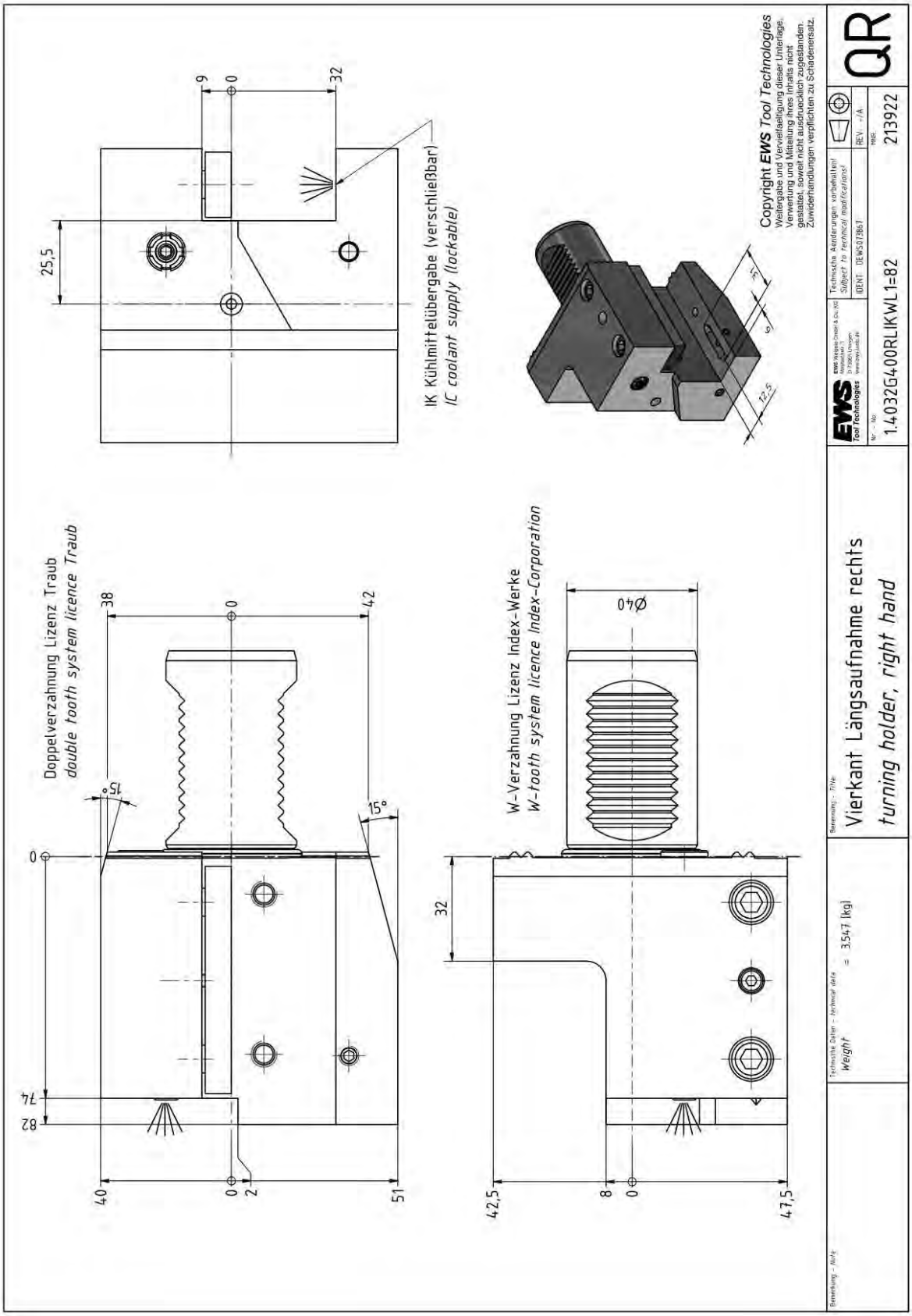

turning holder left hand

Pos.: 4
MNR: 213926
KTXT: 4.4032G400RLIKWL1=82

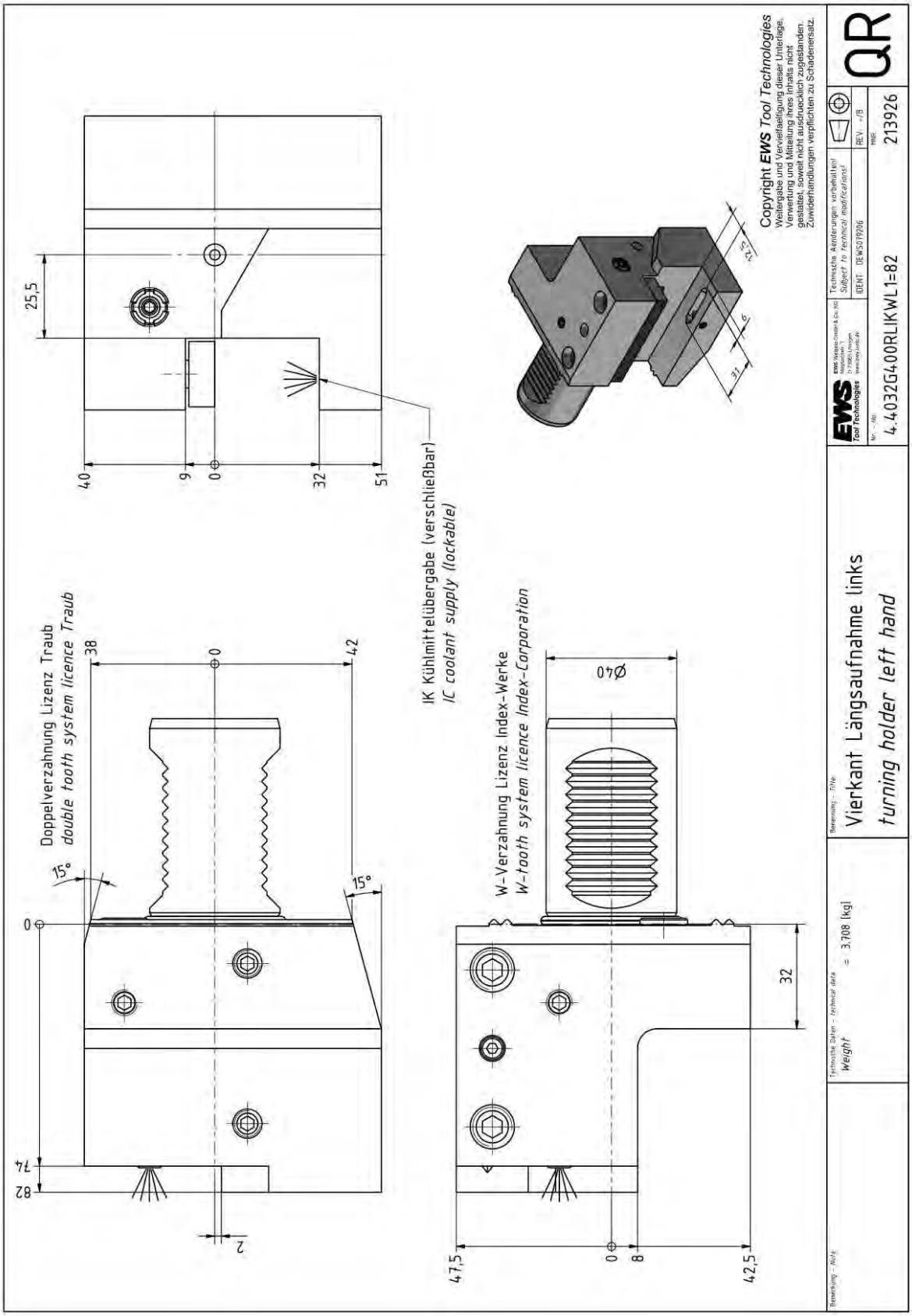

turning tool, right hand

Pos.: 5
MNR: 213931
KTXT: 5.4025G400RLIKWL1=107

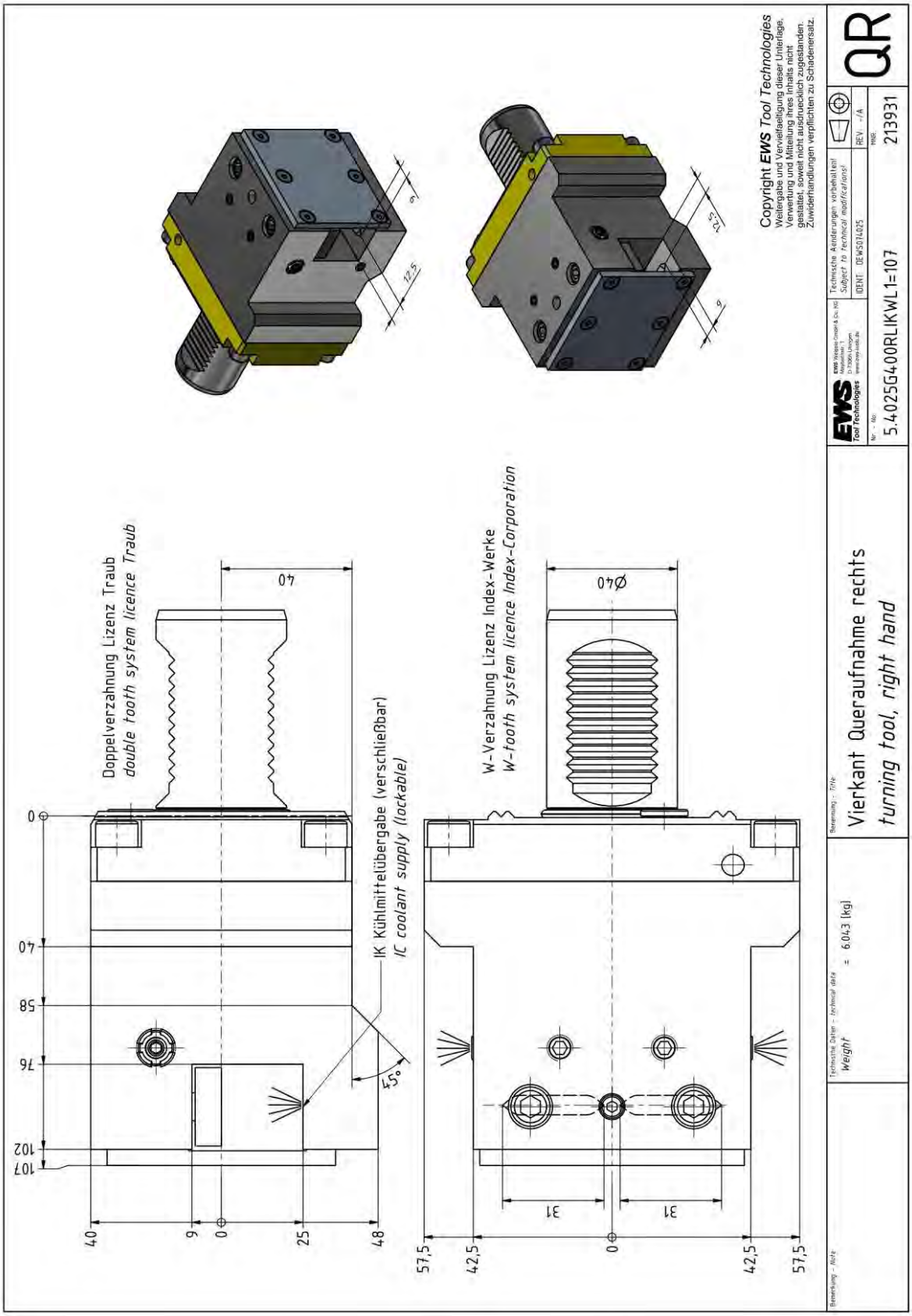

Combi holder for int/ext. cooling

Pos.: 21
MNR: S03030
KTXT: 17.4032G400RLW

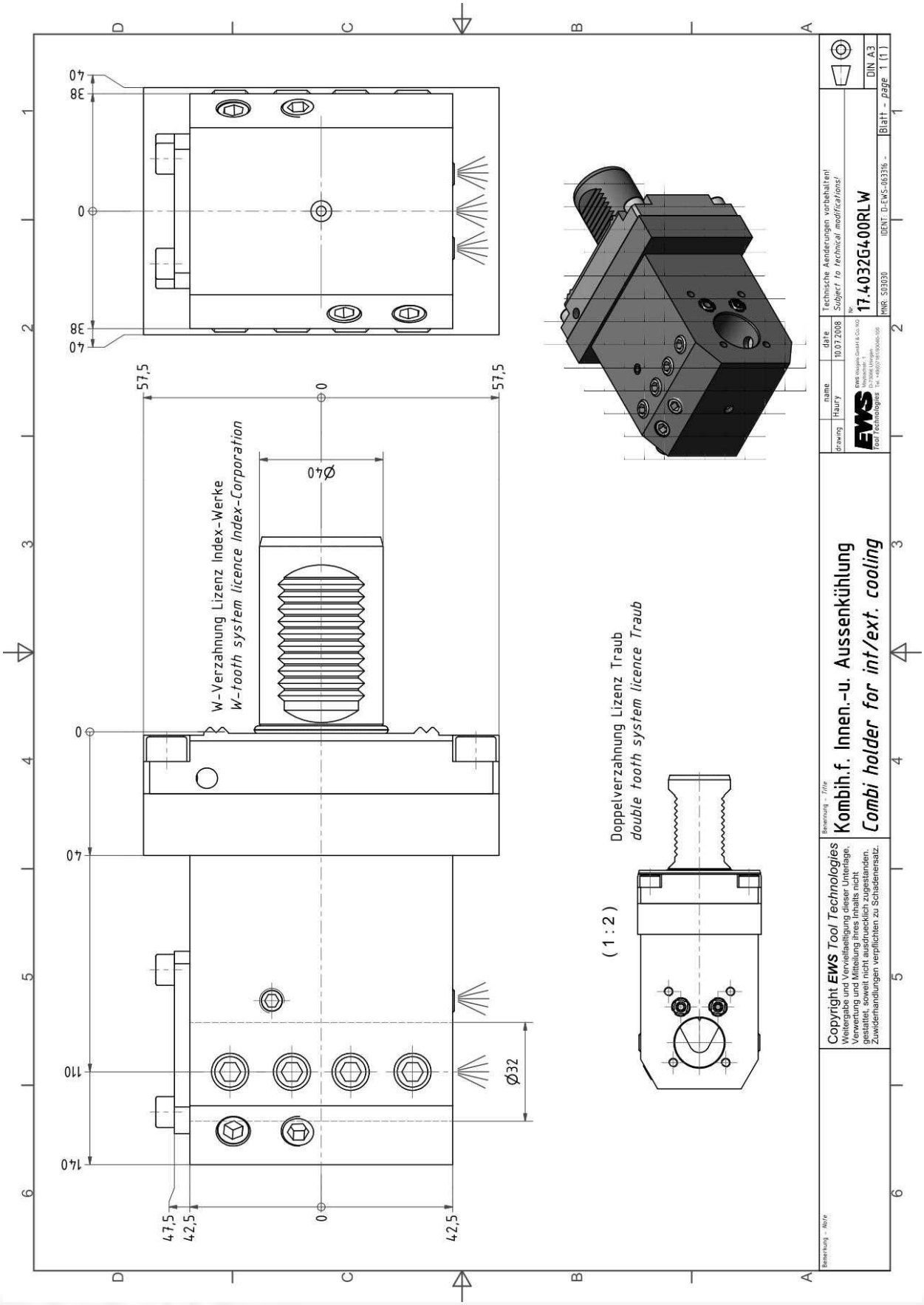

Combi holder for int/ext. cooling

Pos.: 23
MNR: S01999
KTXT: 17.4040G400RLW

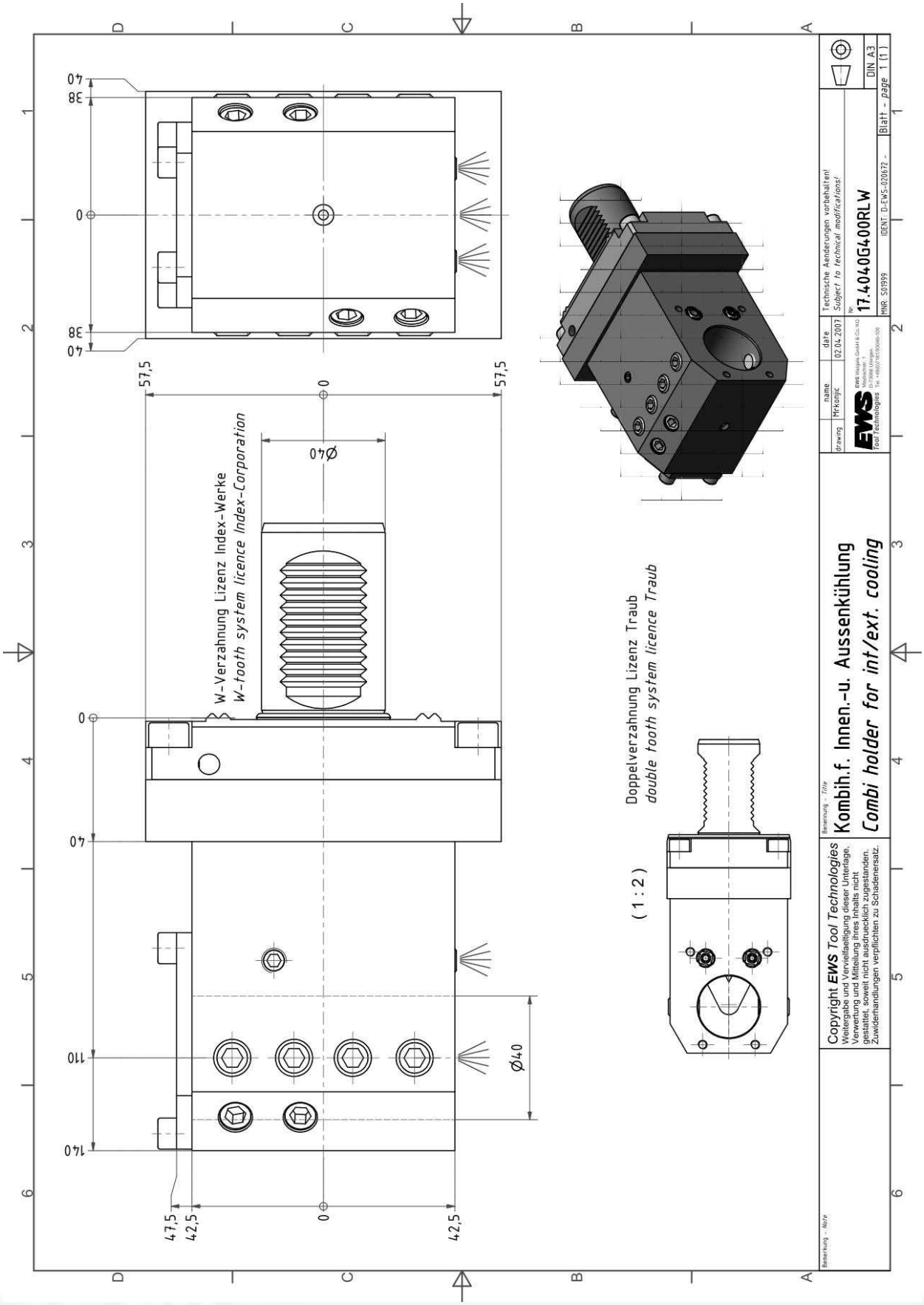

Combi holder for int/ext. cooling

Pos.: 24
MNR: S04267
KTXT: 17.4050G400WX100

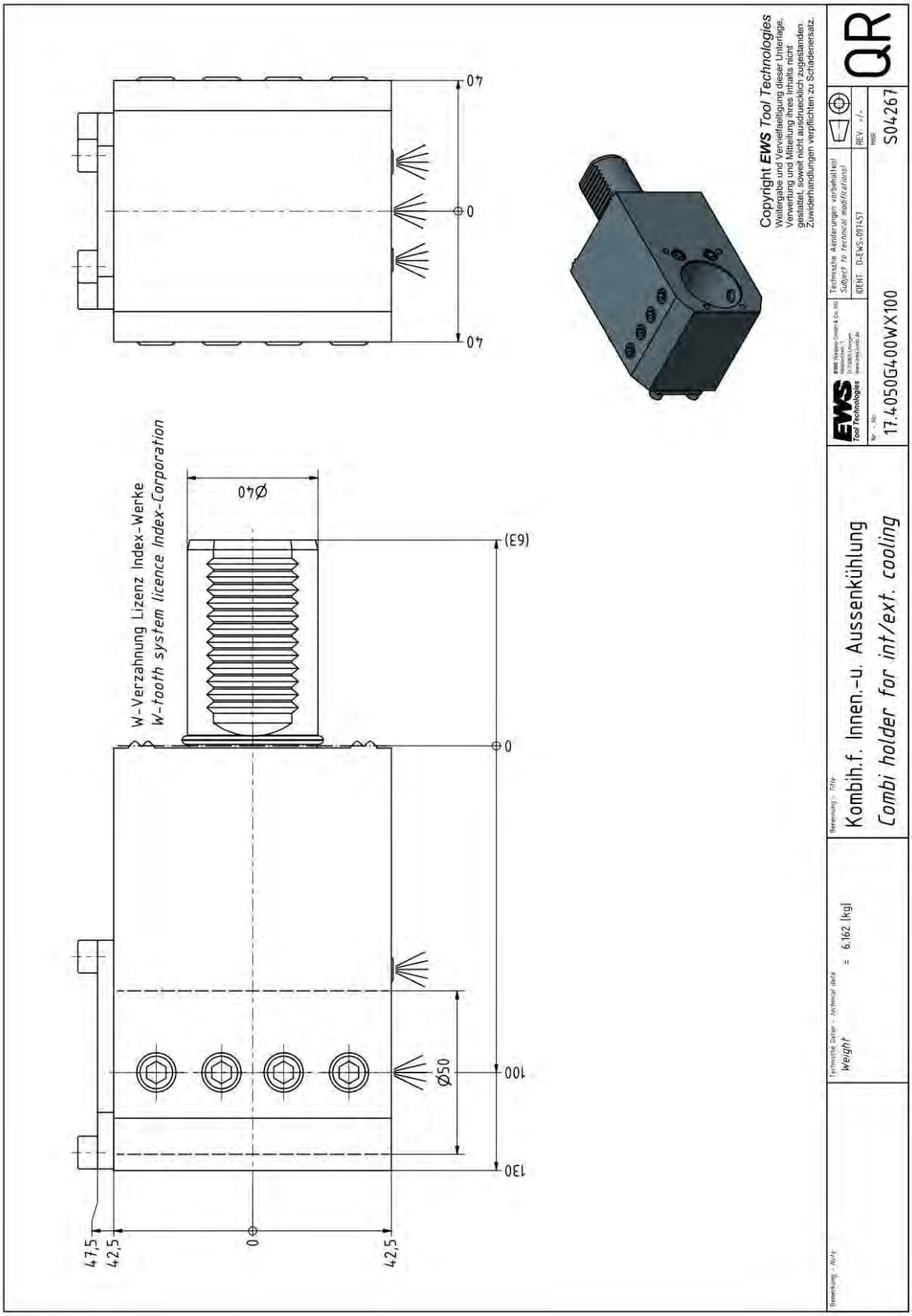

Center point

Pos.: 25
MNR: 209445
KTXT: 47640G400RLW-S01

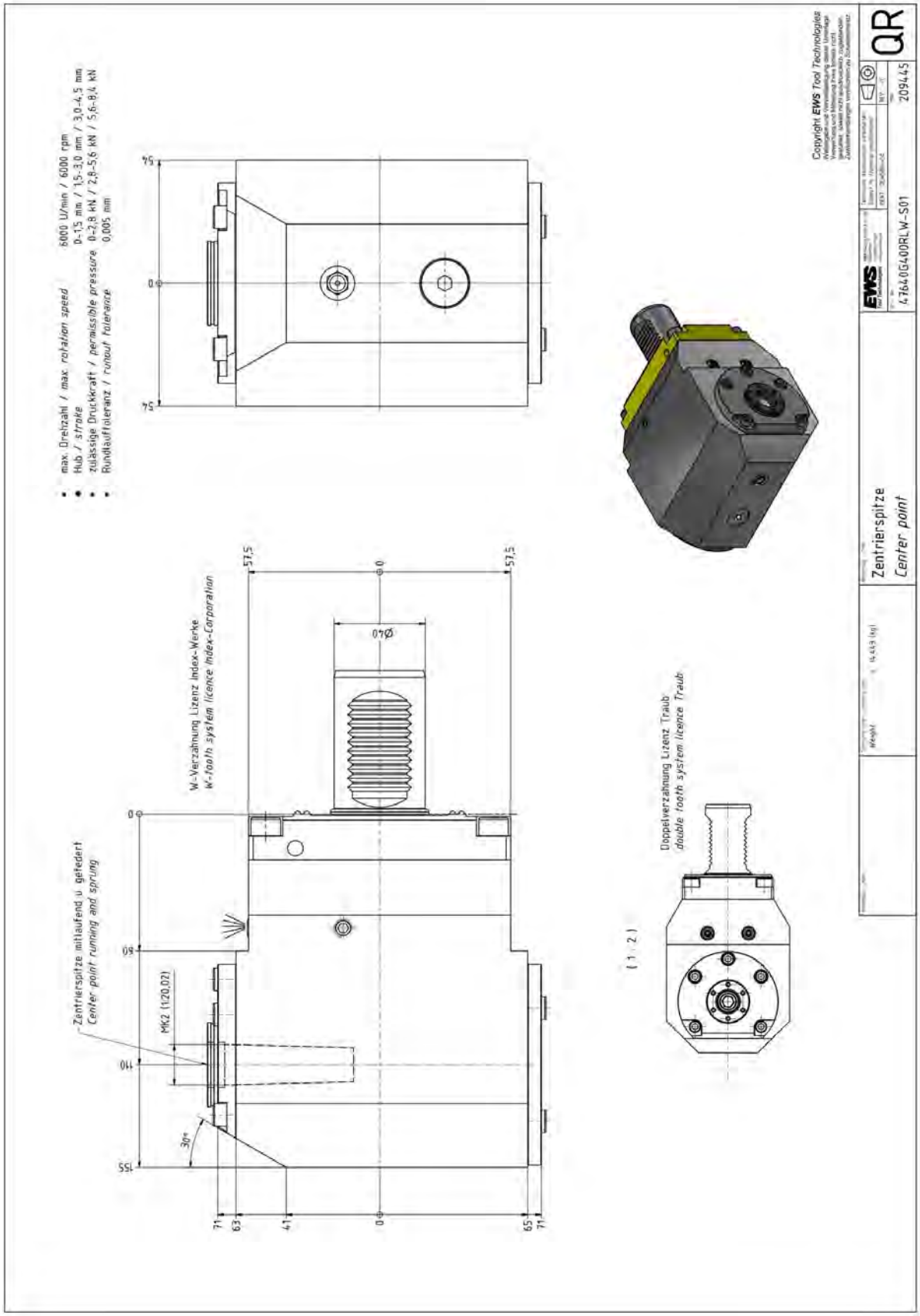

Reducing sleeve

Pos.: 202
MNR: 136376
KTXT: 28.4006S

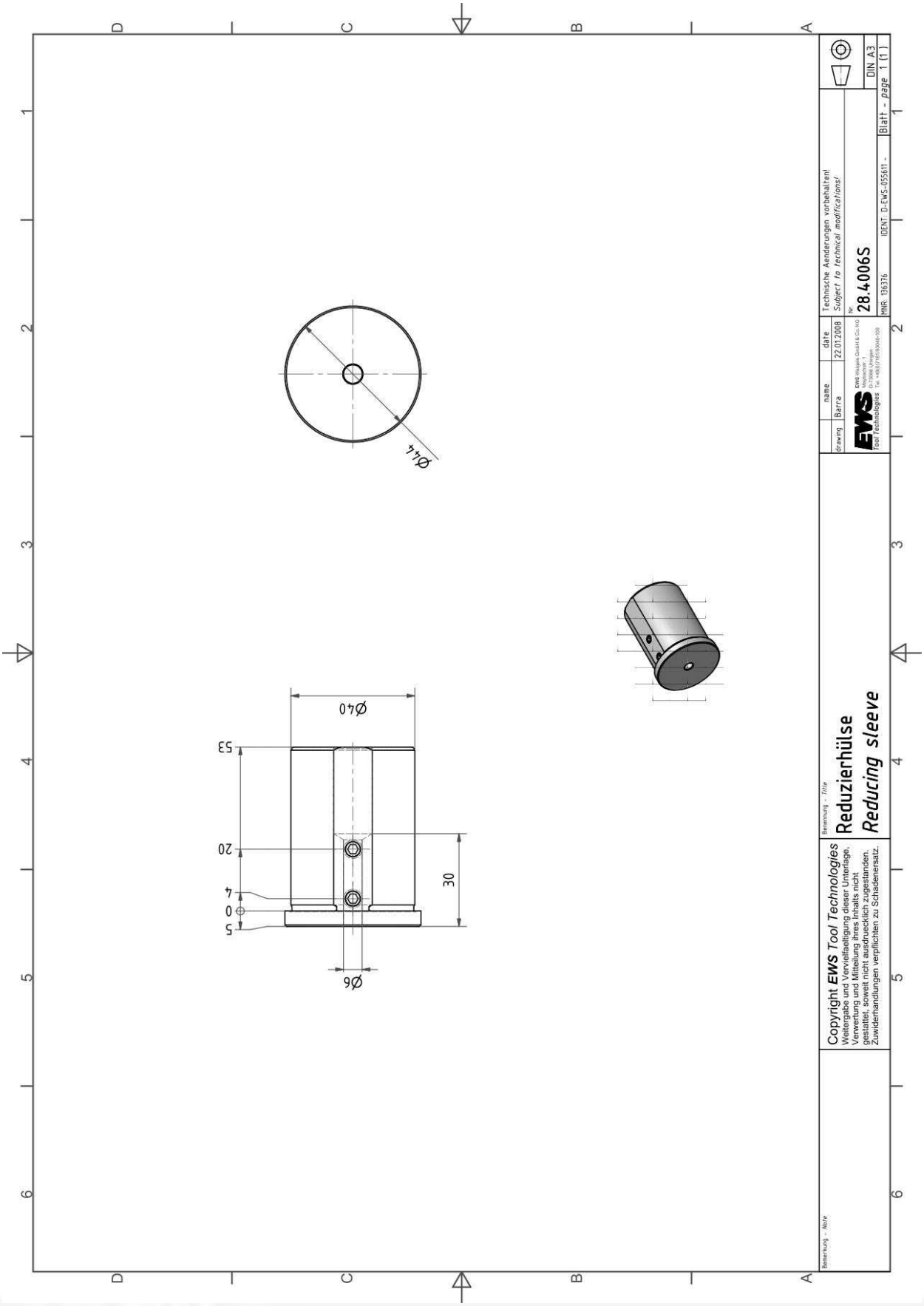

Reducing sleeve

Pos.: 203
MNR: 136377
KTXT: 28.4008S

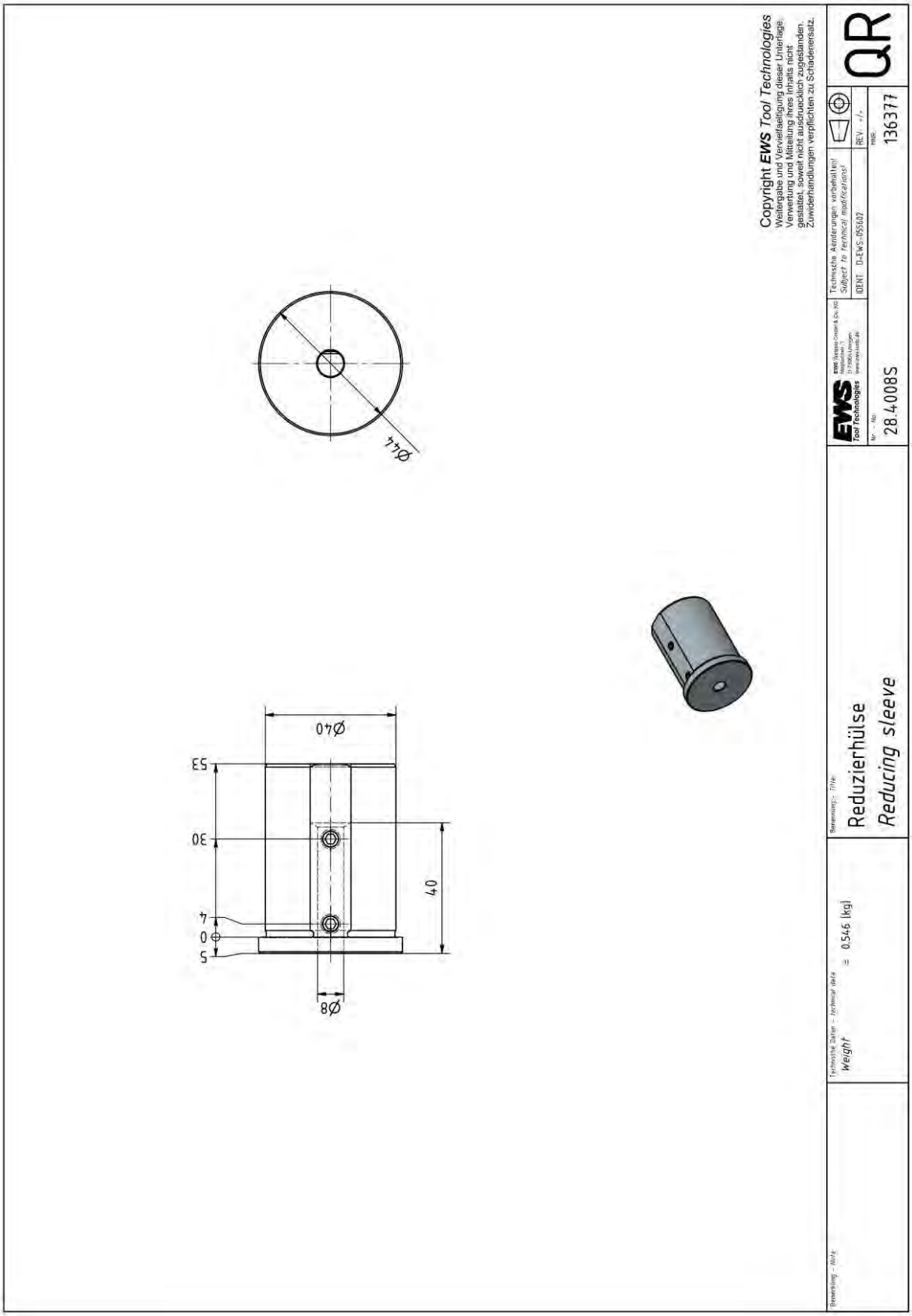

Reducing sleeve

Pos.: 204
MNR: 136378
KTXT: 28.4010S

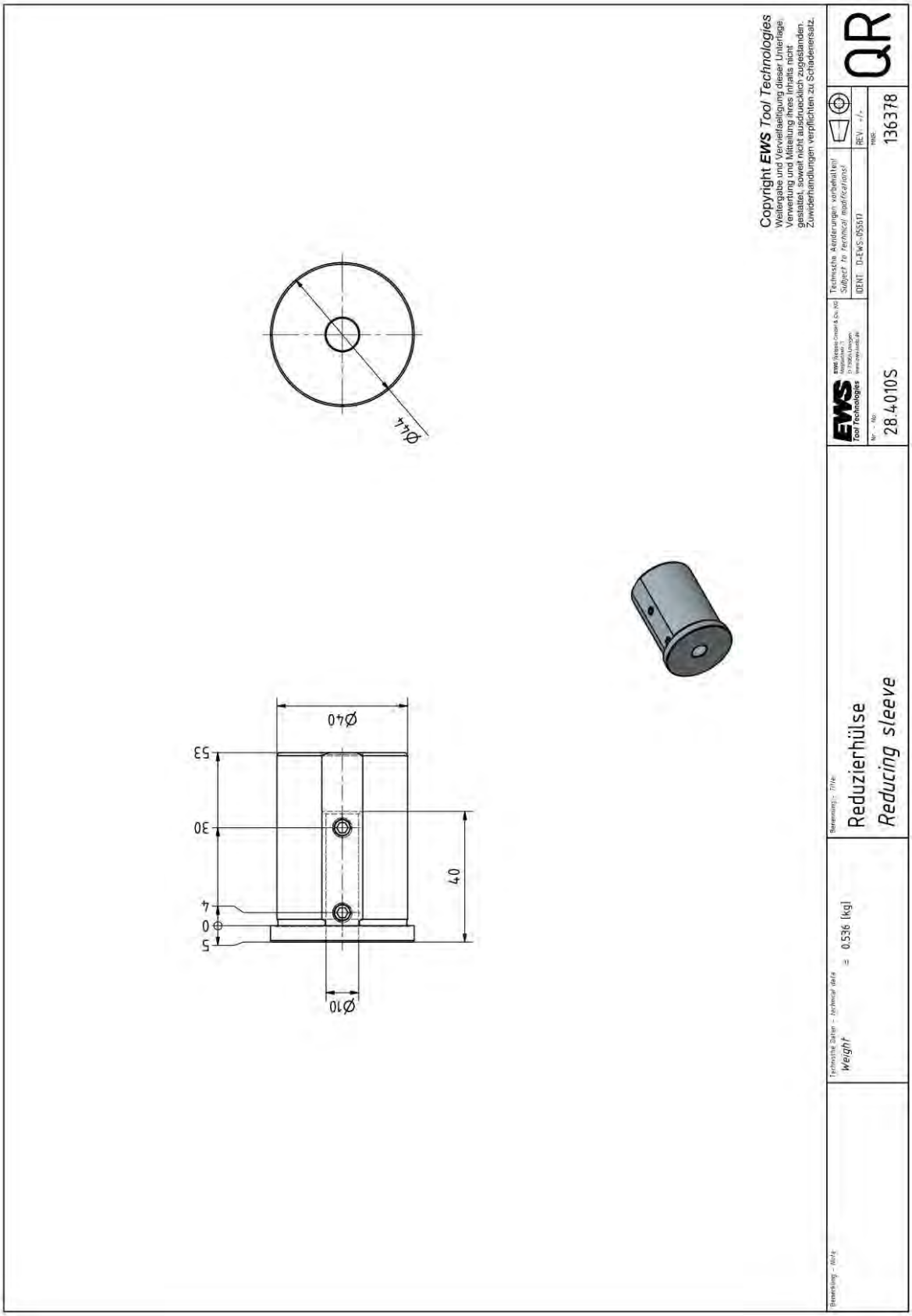

Reducing sleeve

Pos.: 205
MNR: 136379
KTXT: 28.4012S

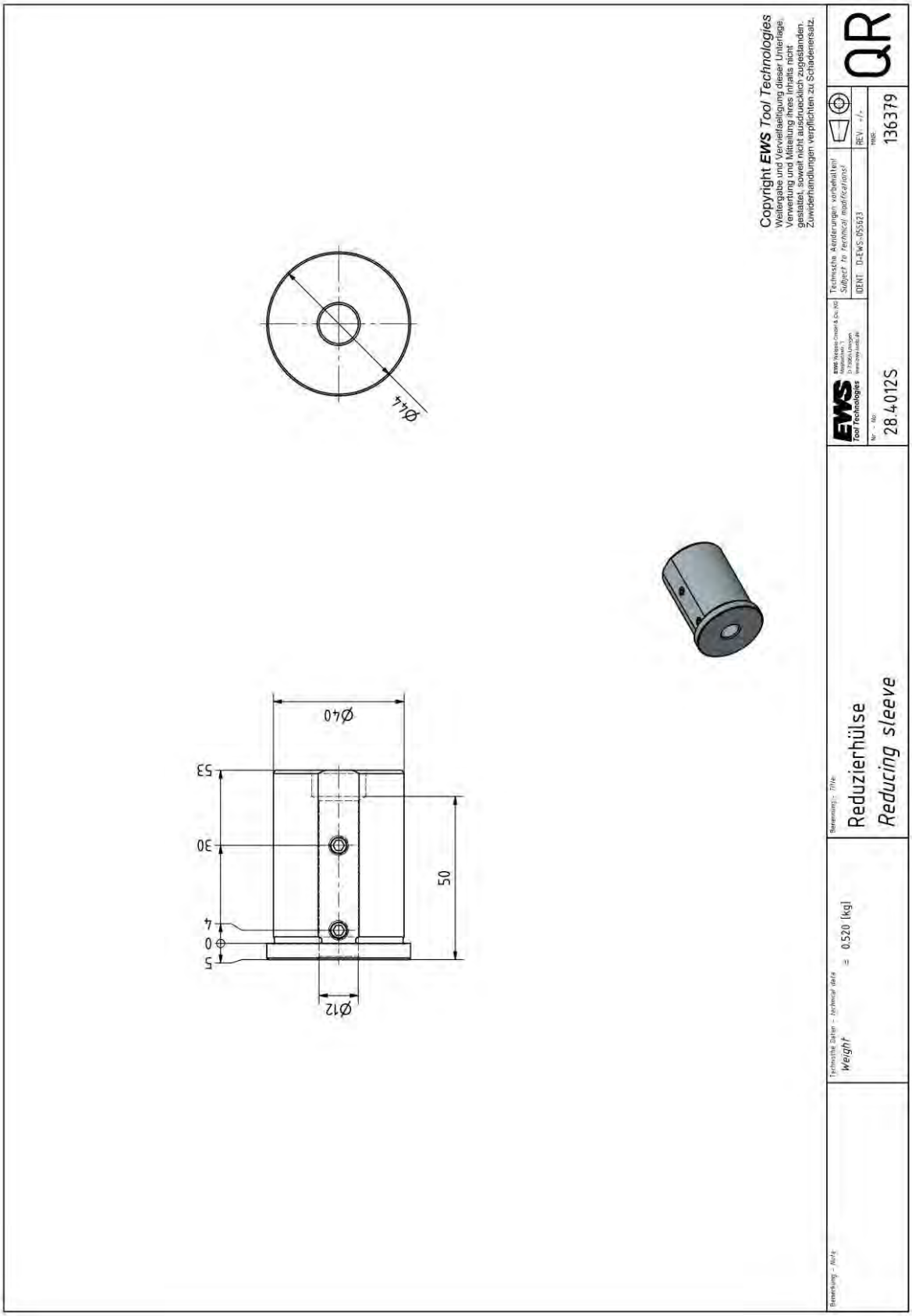

Reducing sleeve

Pos.: 206
MNR: 136381
KTXT: 28.4016S

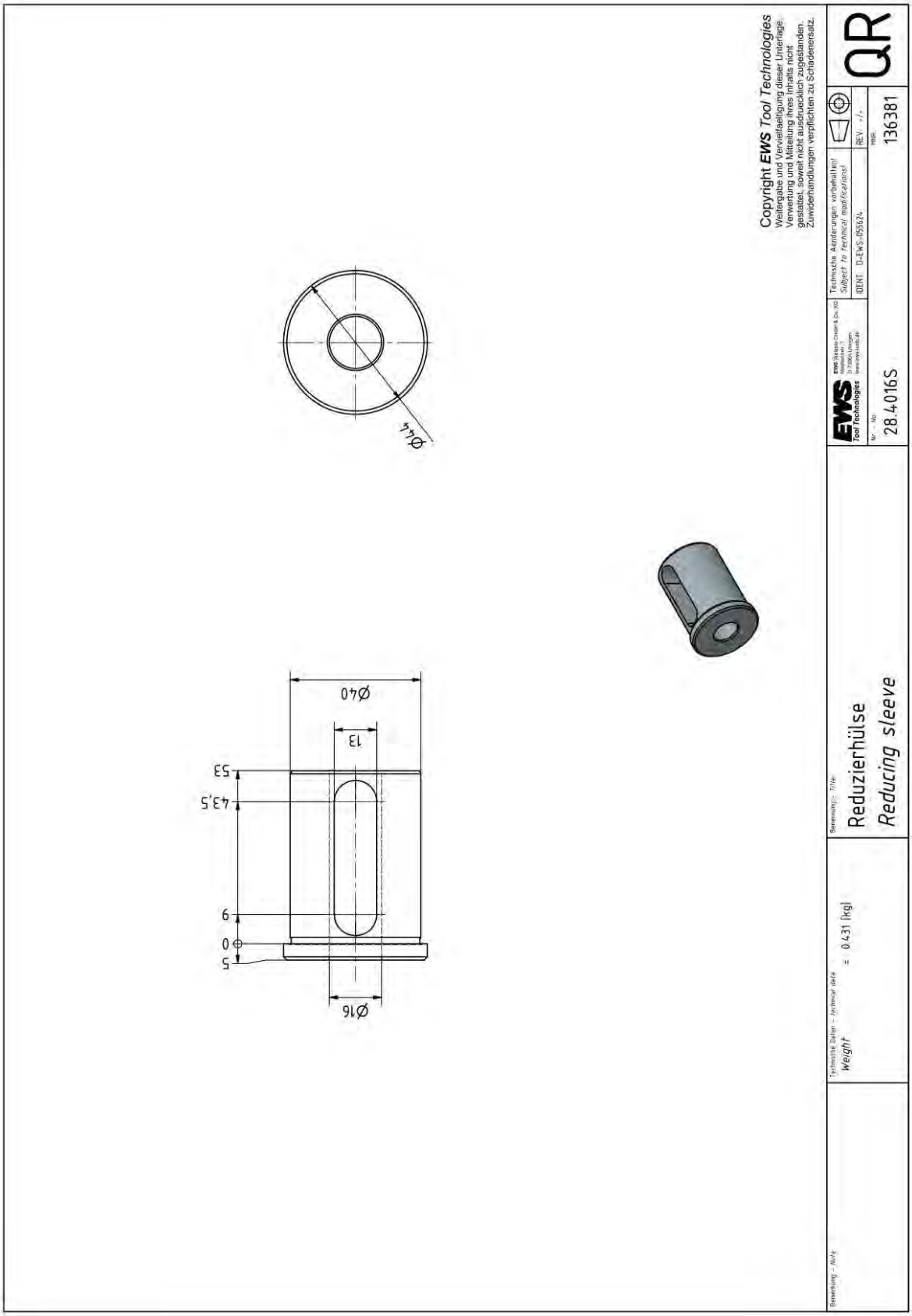

Reducing sleeve

Pos.: 207
MNR: 136384
KTXT: 28.4020S

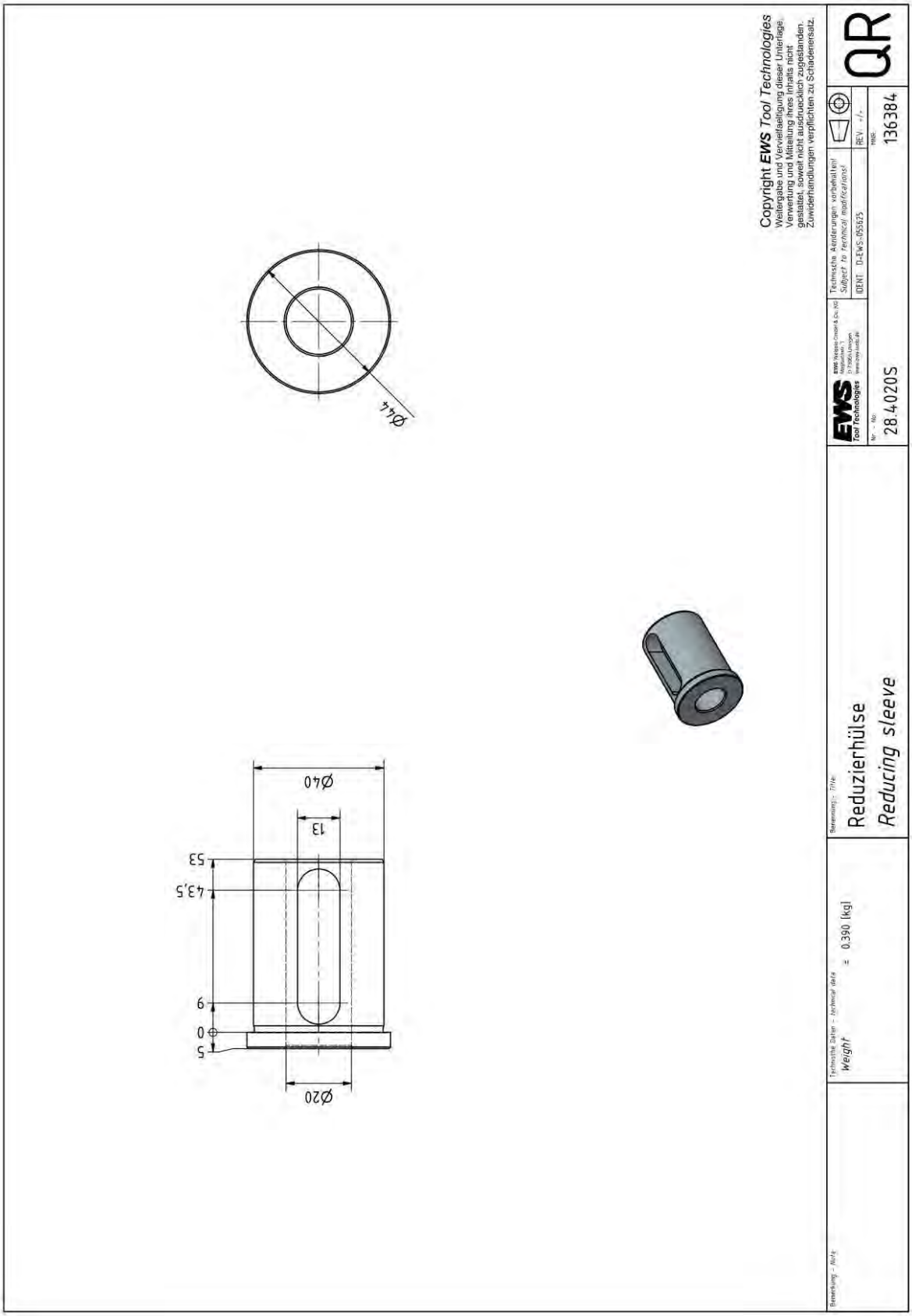

Reducing sleeve

Pos.: 208
MNR: 136385
KTXT: 28.4025S

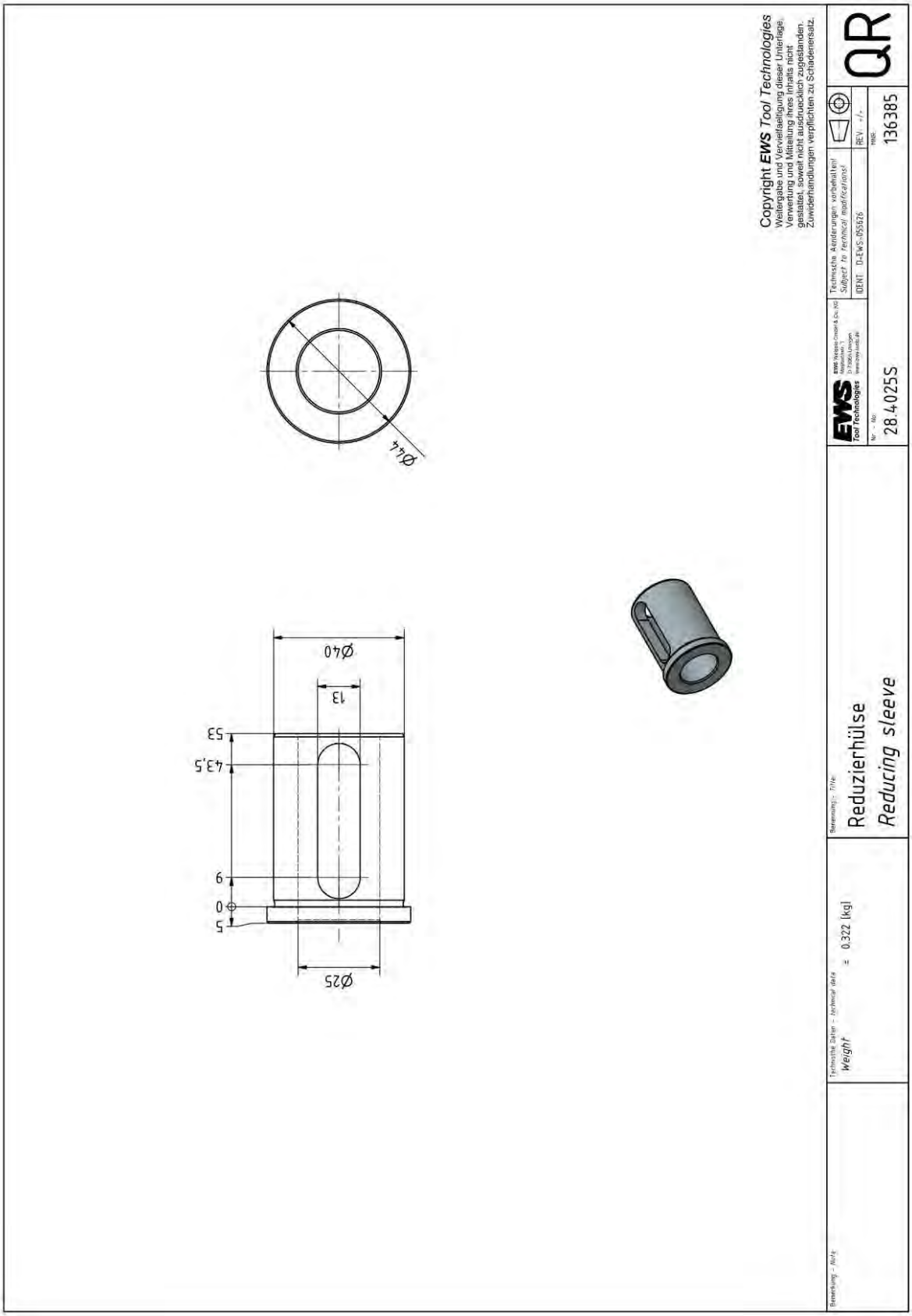

Reducing sleeve

Pos.: 209
MNR: 136388
KTXT: 28.4032S

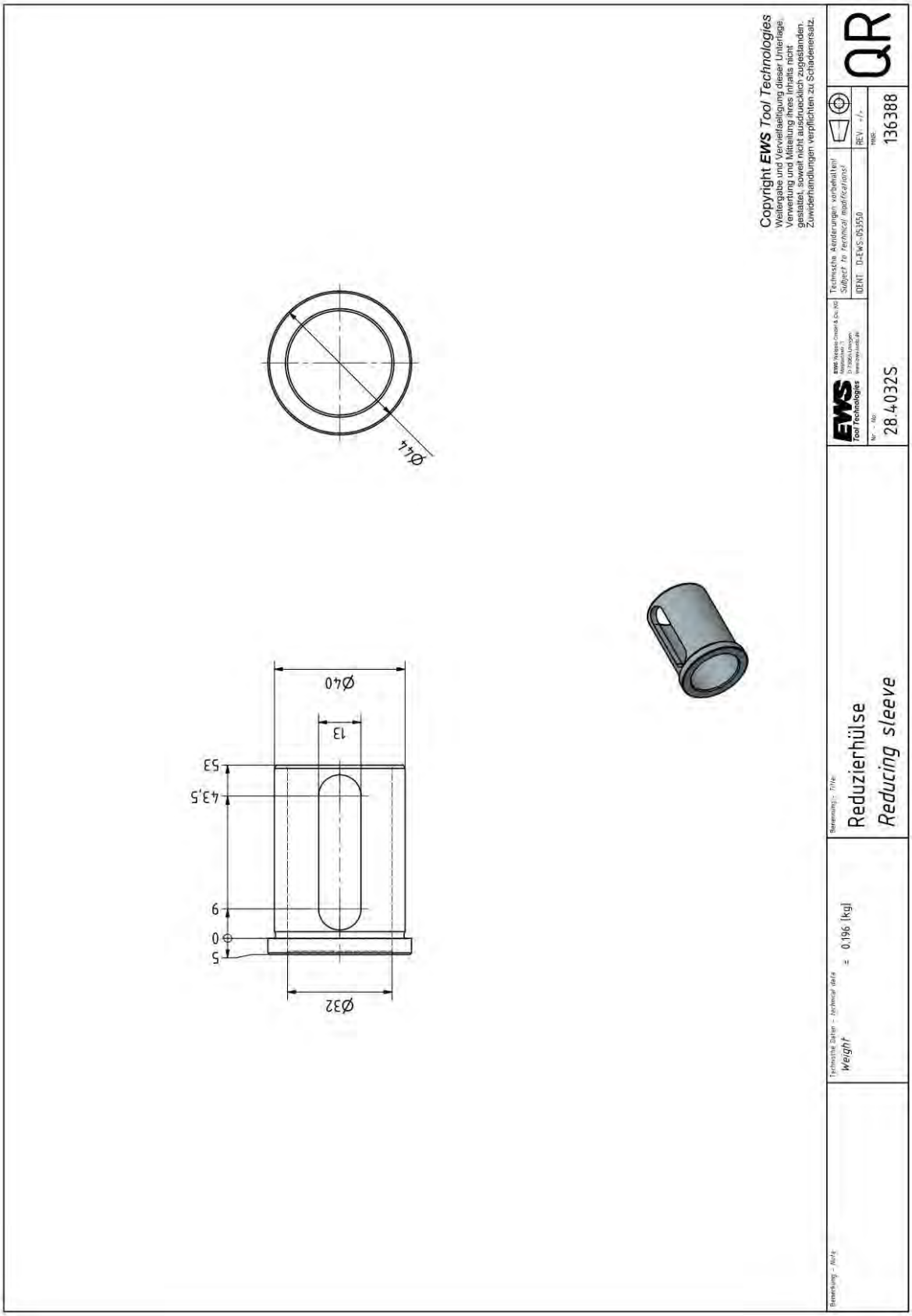

Reducing sleeve

Pos.: 210
MNR: 160321
KTXT: 28.4016S-GEW

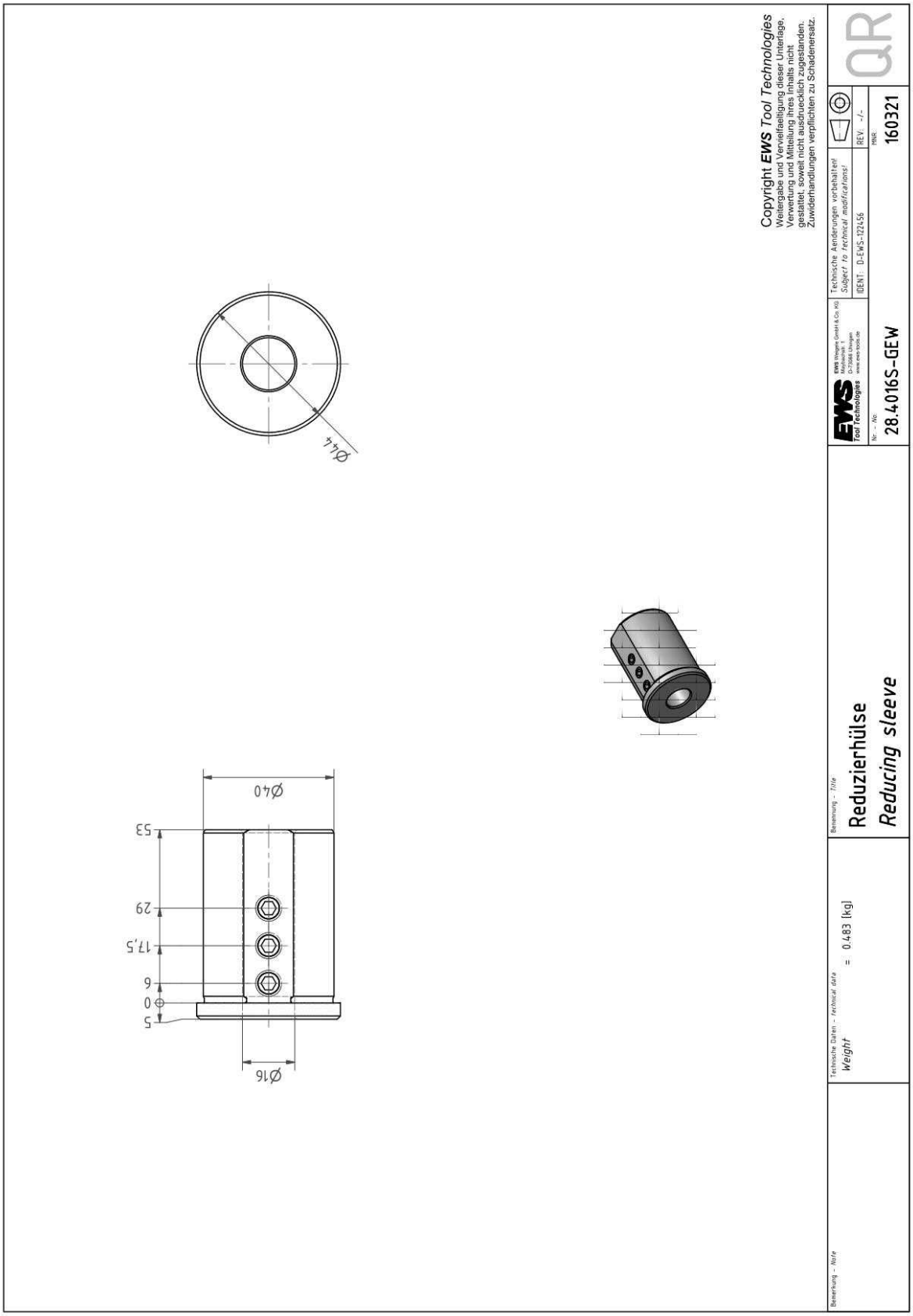

Reducing sleeve

Pos.: 211
MNR: S04009
KTXT: 28.4020S-GEW

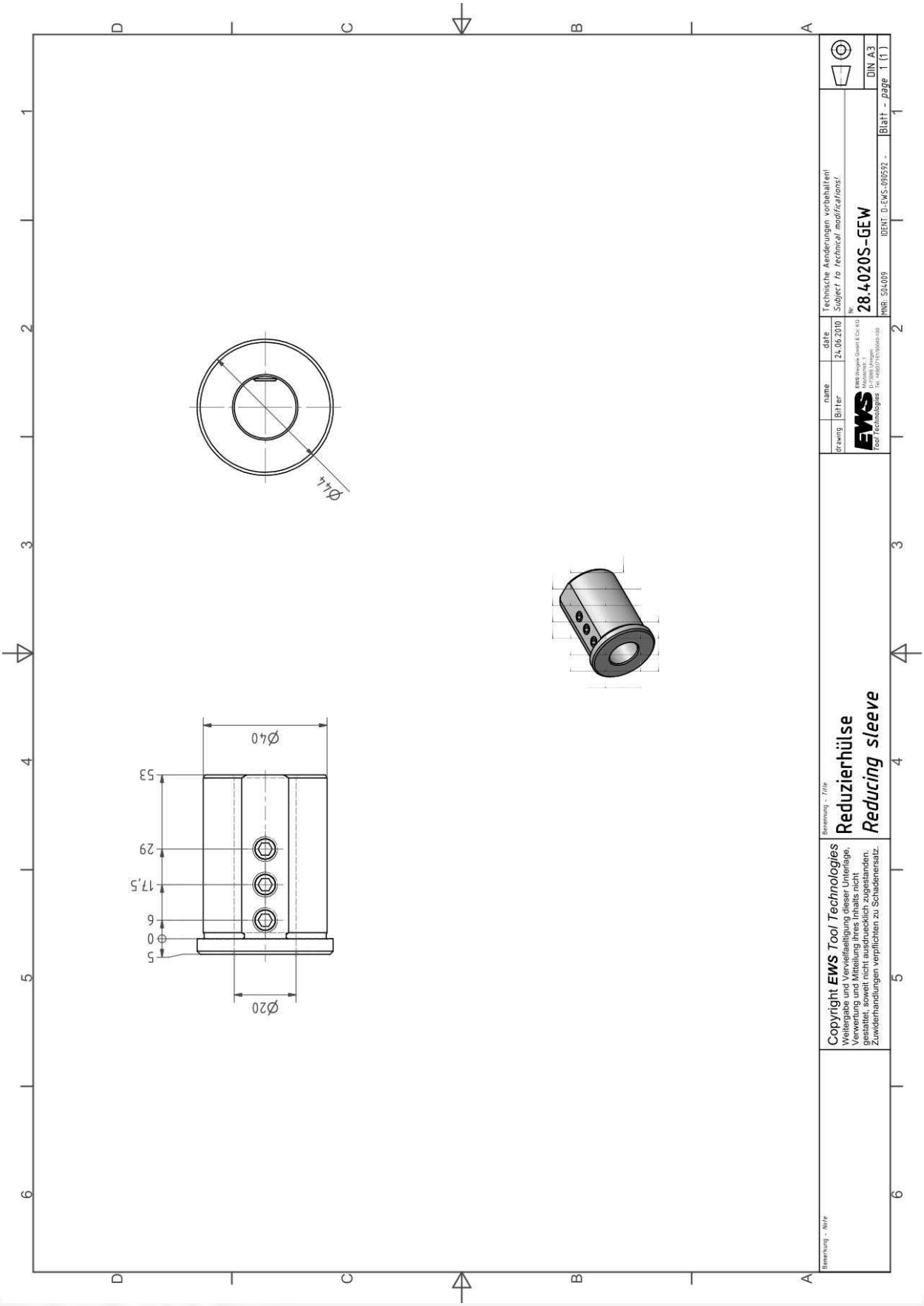

Reducing sleeve

Pos.: 212
MNR: 163928
KTXT: 28.4025S-GEW

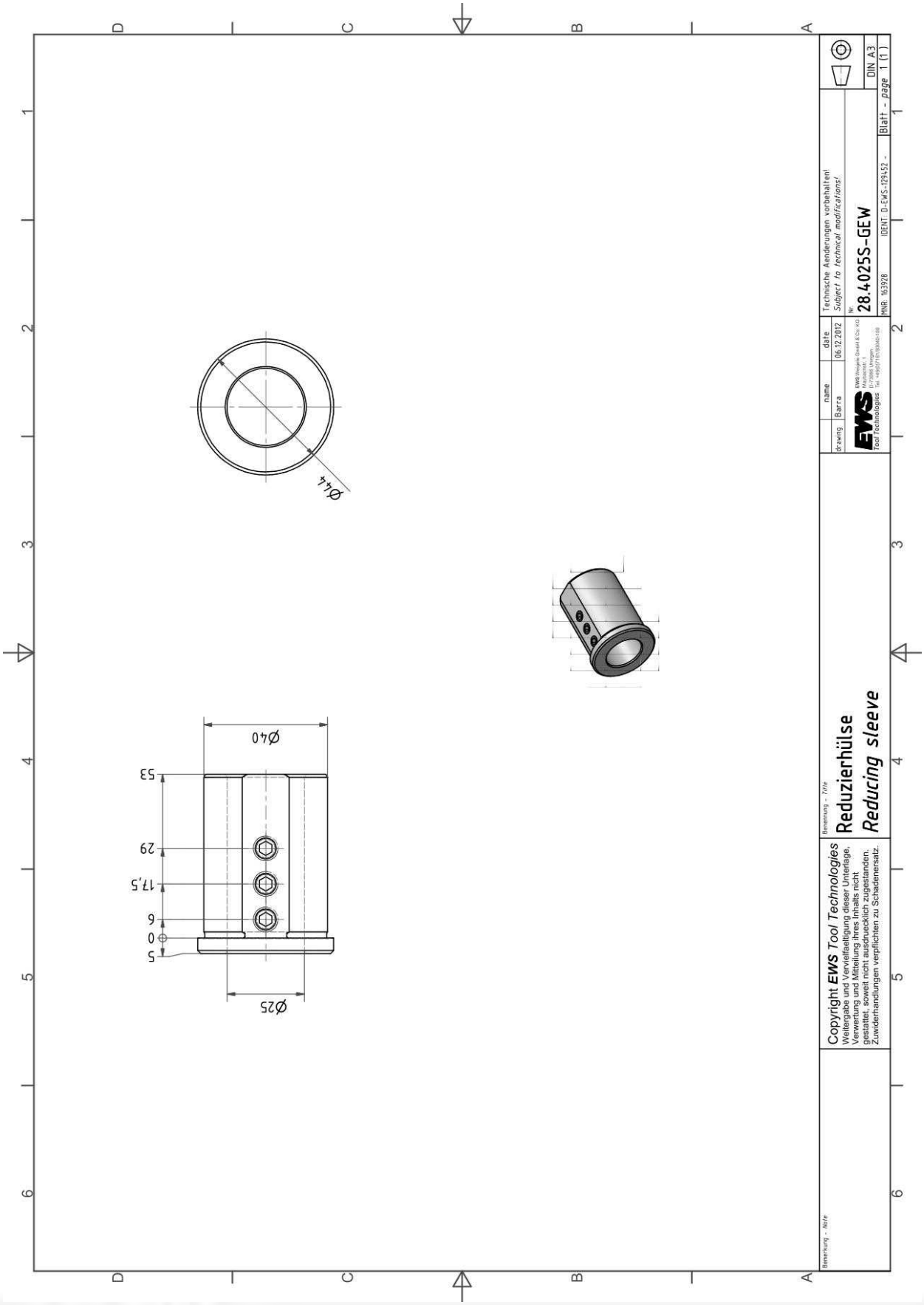

Reducing sleeve

Pos.: 213
MNR: 221278
KTXT: 28.4032S-M6

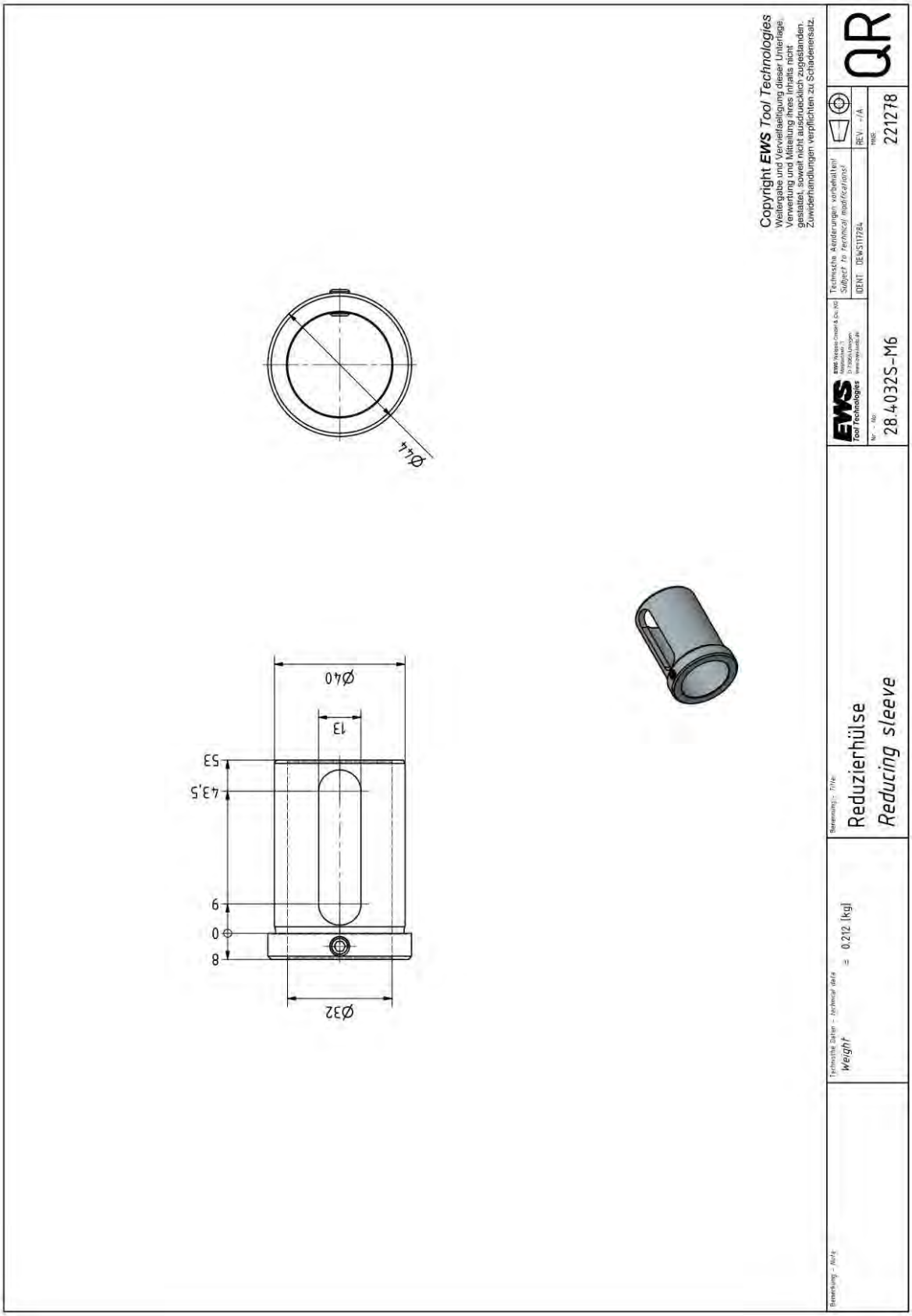

Reducing sleeve

Pos.: 241
MNR: 136491
KTXT: 28.5006S

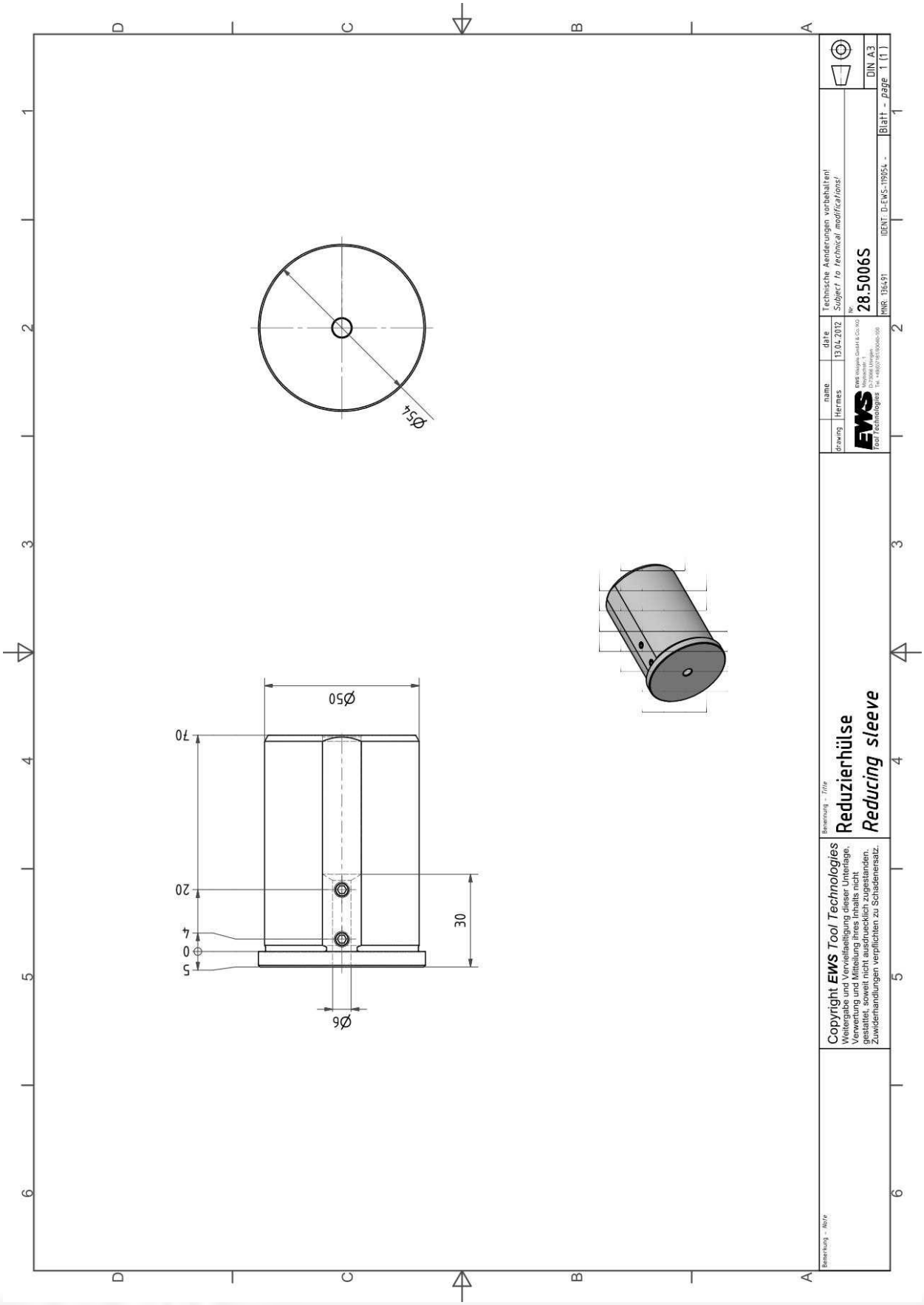

Reducing sleeve

Pos.: 242
MNR: 136488
KTXT: 28.5008S

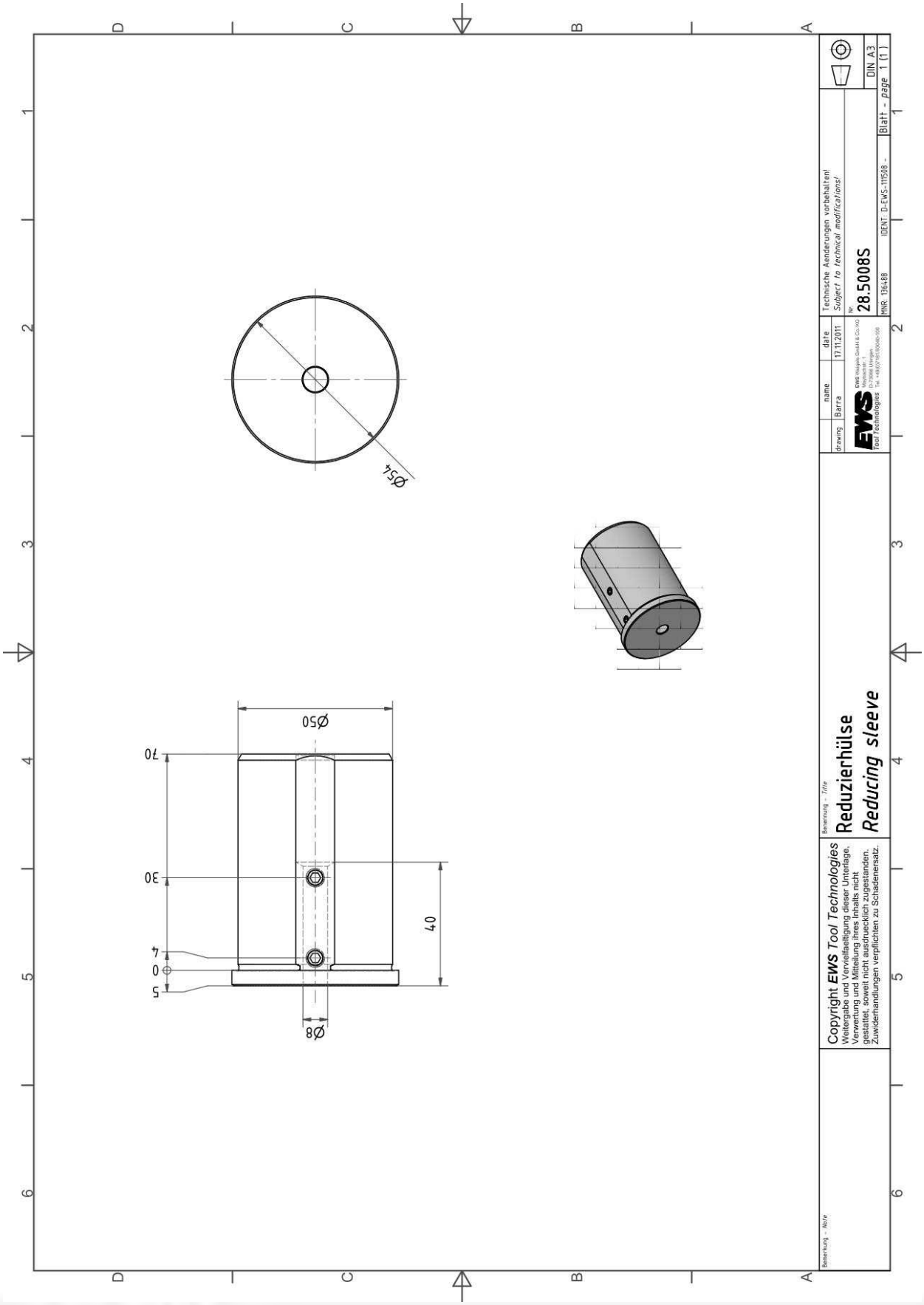

Reducing sleeve

Pos.: 243
MNR: 136489
KTXT: 28.5010S

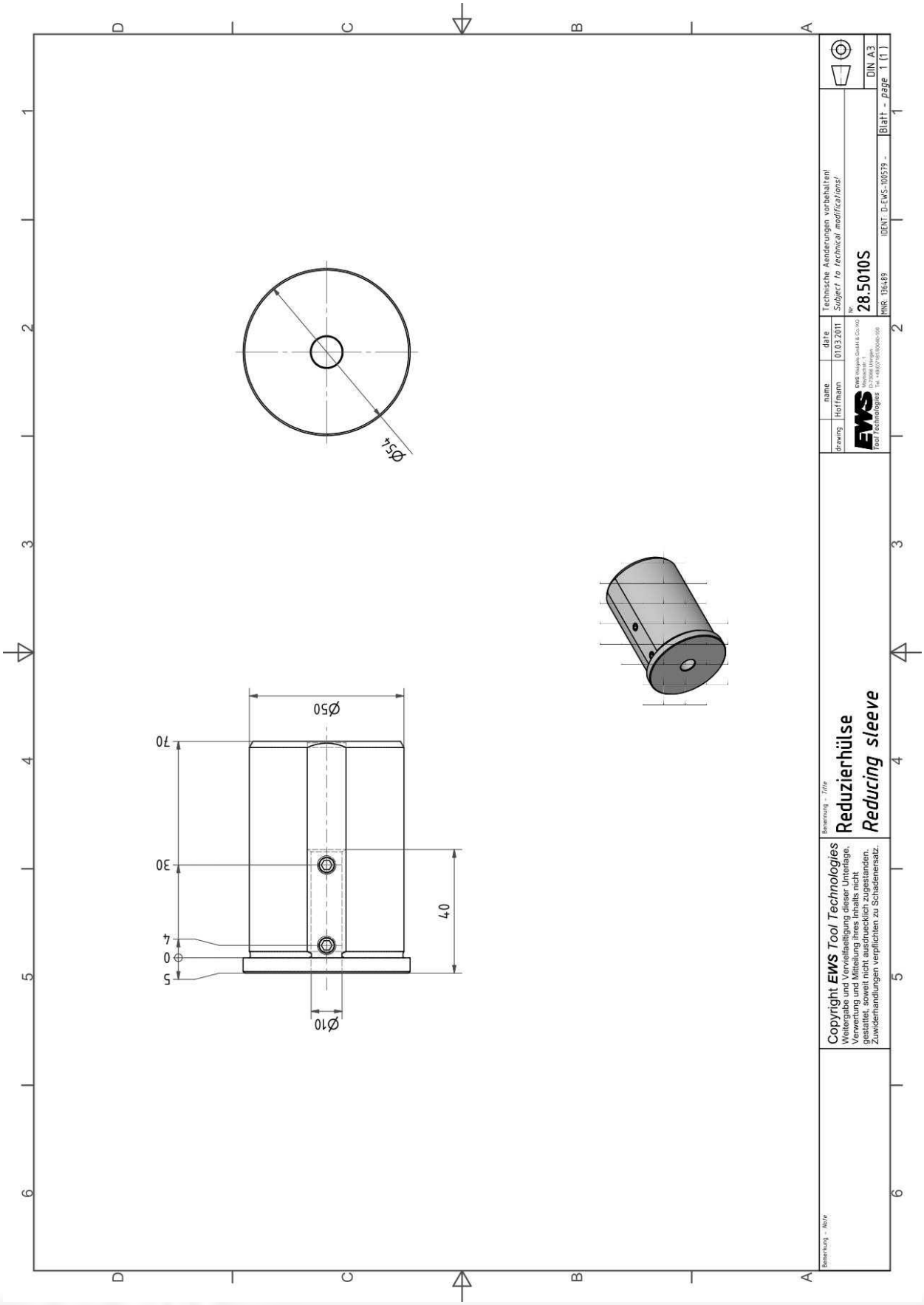

Reducing sleeve

Pos.: 244
MNR: 136480
KTXT: 28.5012S

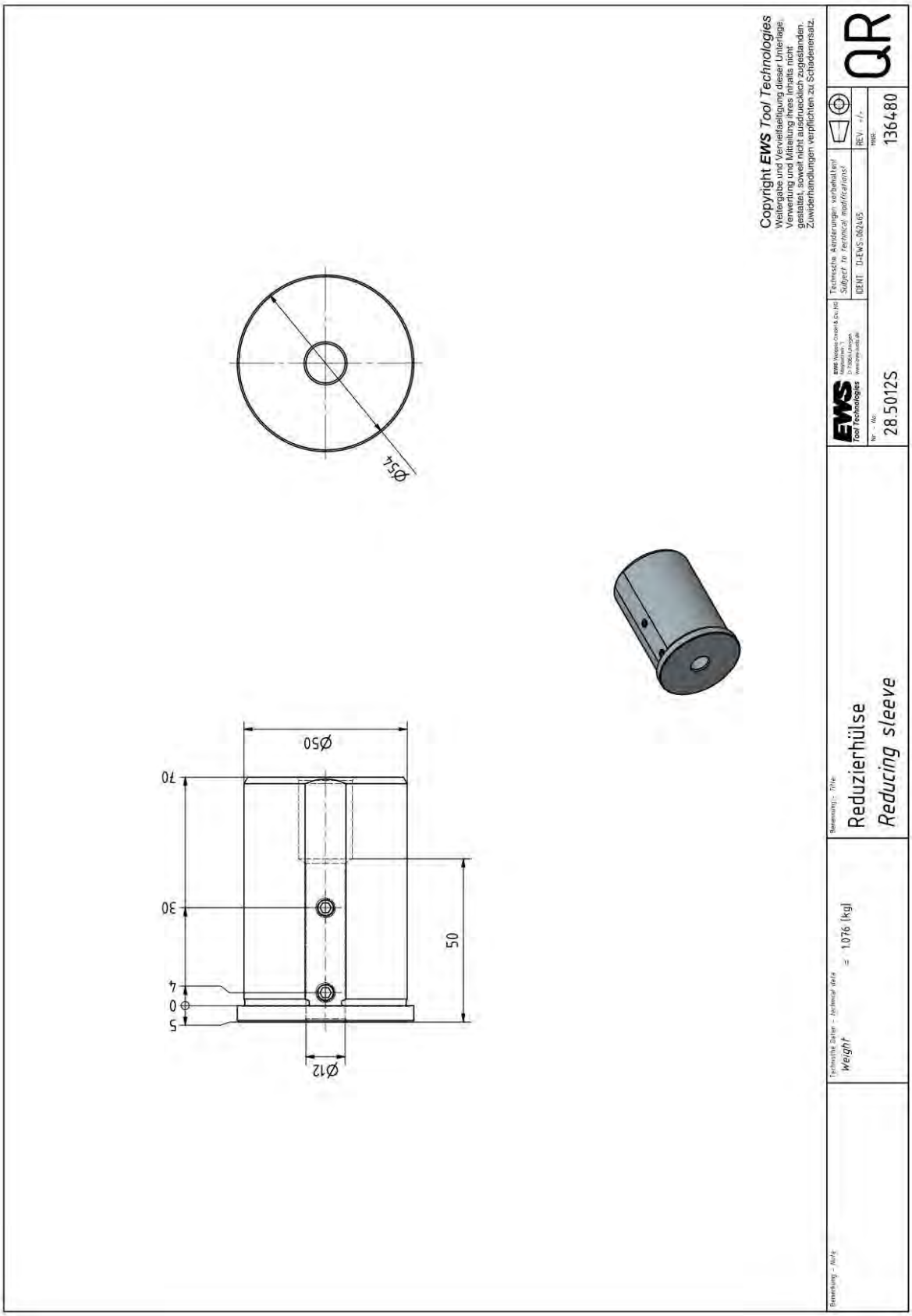

Reducing sleeve

Pos.: 245
MNR: 136481
KTXT: 28.5016S

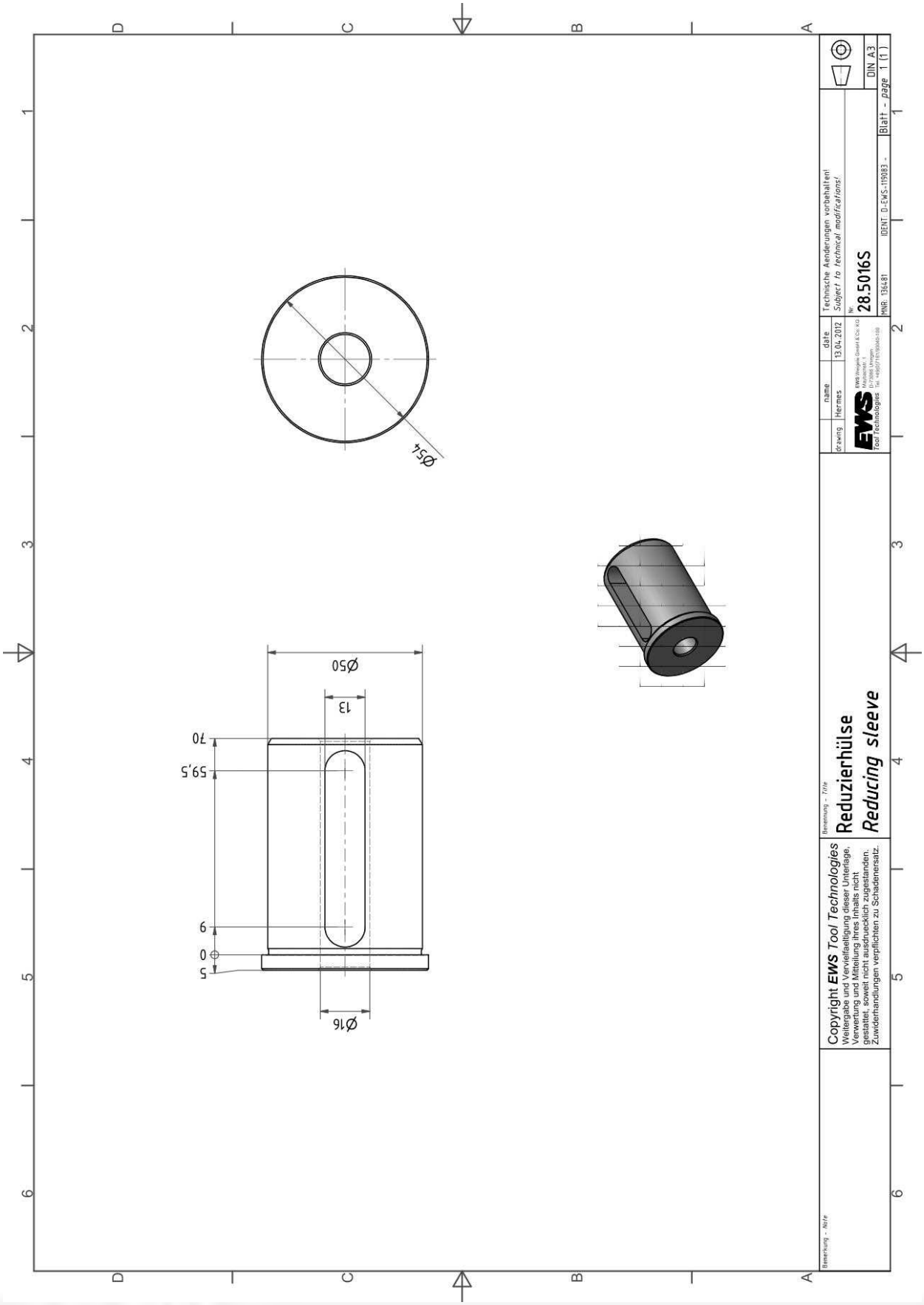

Reducing sleeve

Pos.: 246
MNR: 136482
KTXT: 28.5020S

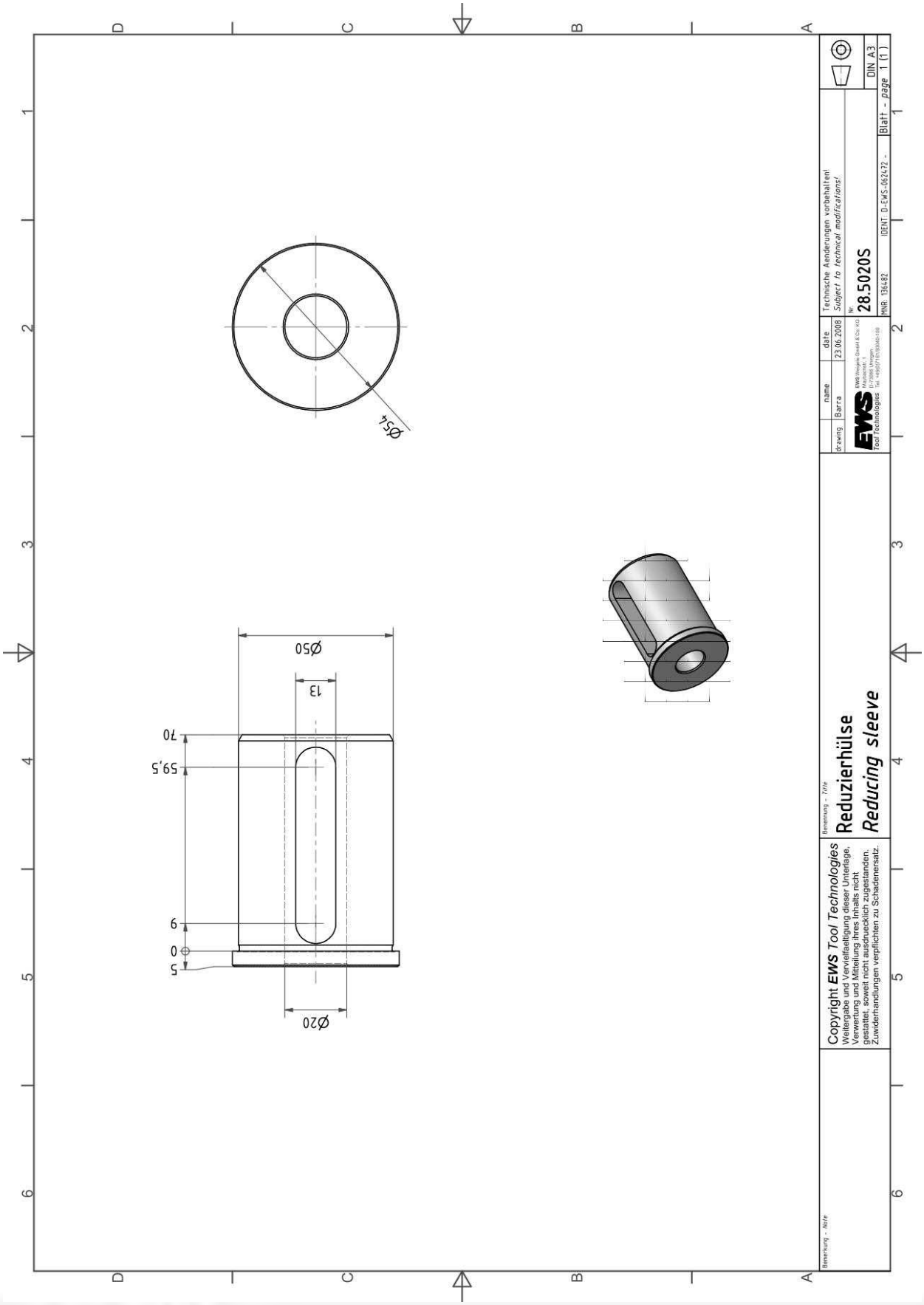

Reducing sleeve

Pos.: 247
MNR: 136483
KTXT: 28.5025S

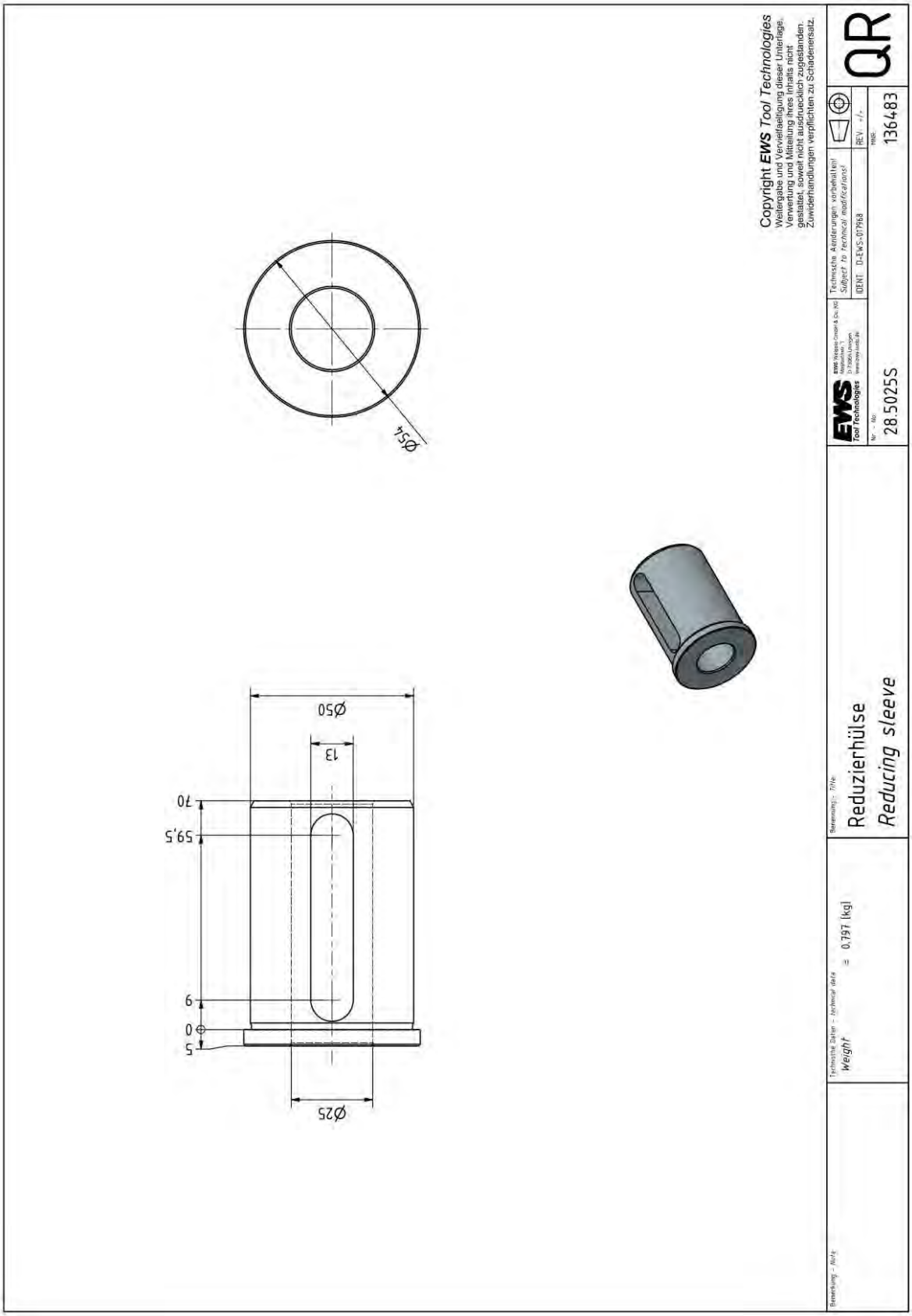

Reducing sleeve

Pos.: 248
MNR: 136484
KTXT: 28.5032S

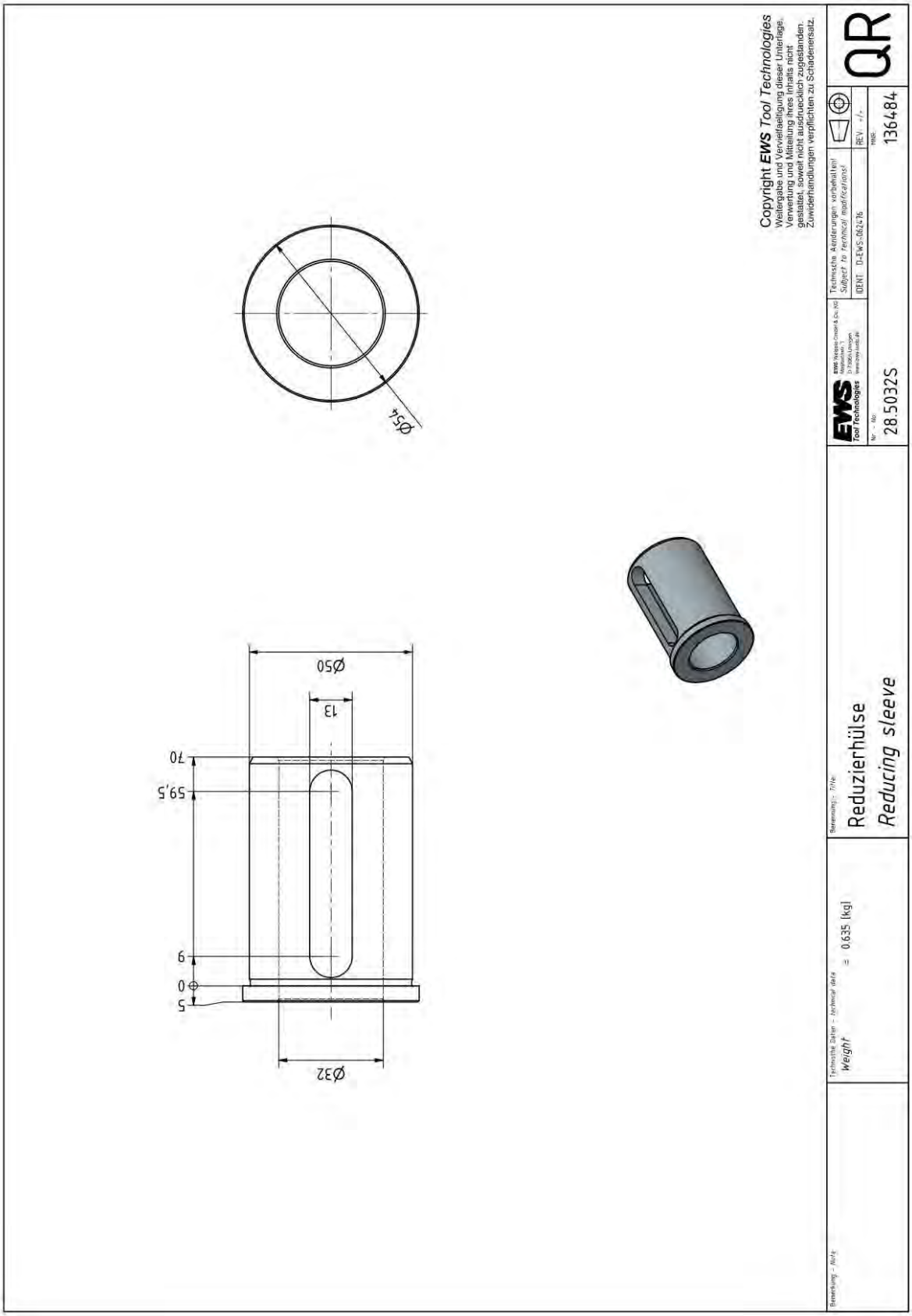

Reducing sleeve

Pos.: 249
MNR: 136485
KTXT: 28.5040S

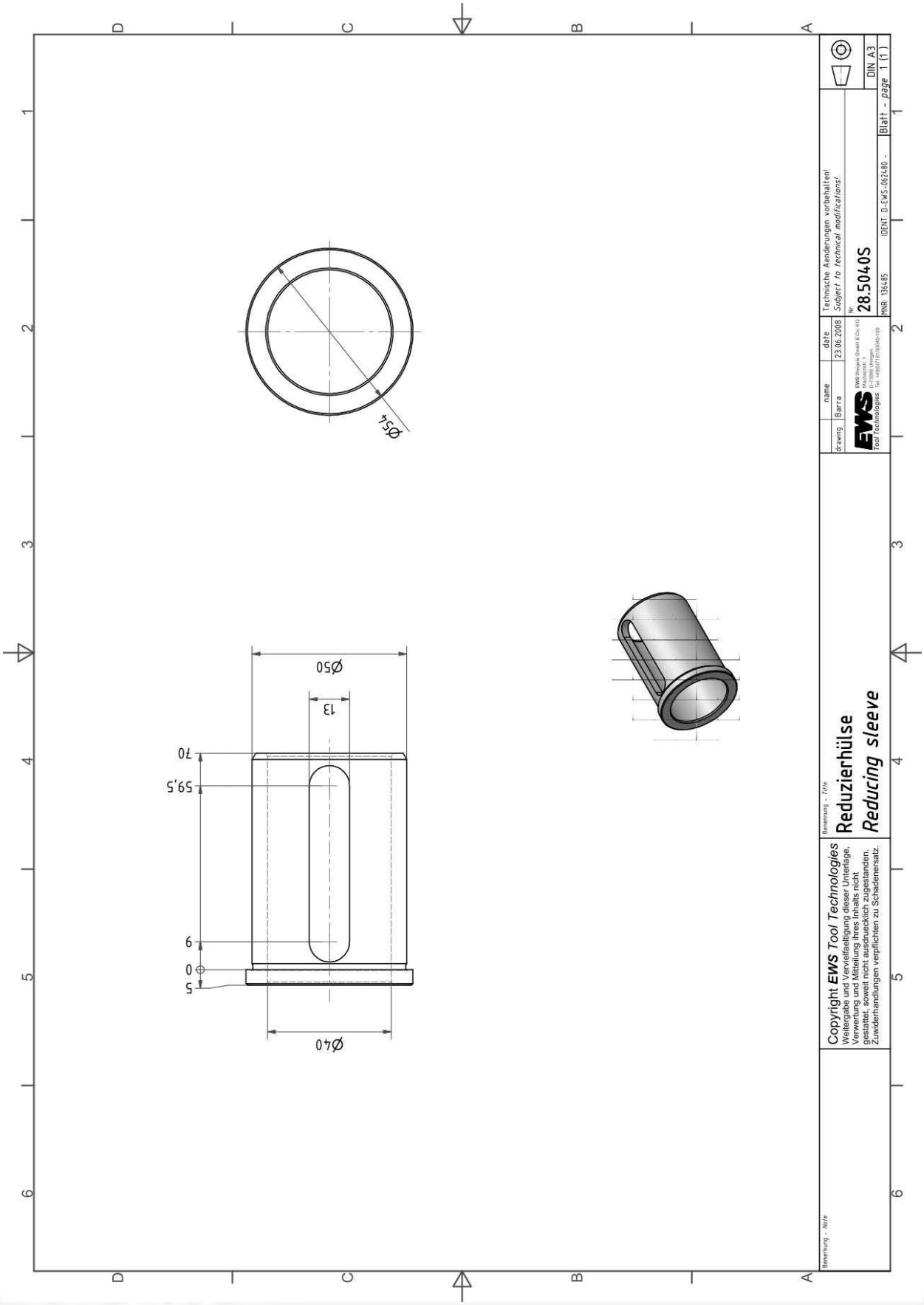

Boring bar holder

Pos.: 30
MNR: 213891
KTXT: 19.40VX4G400RLWZ12

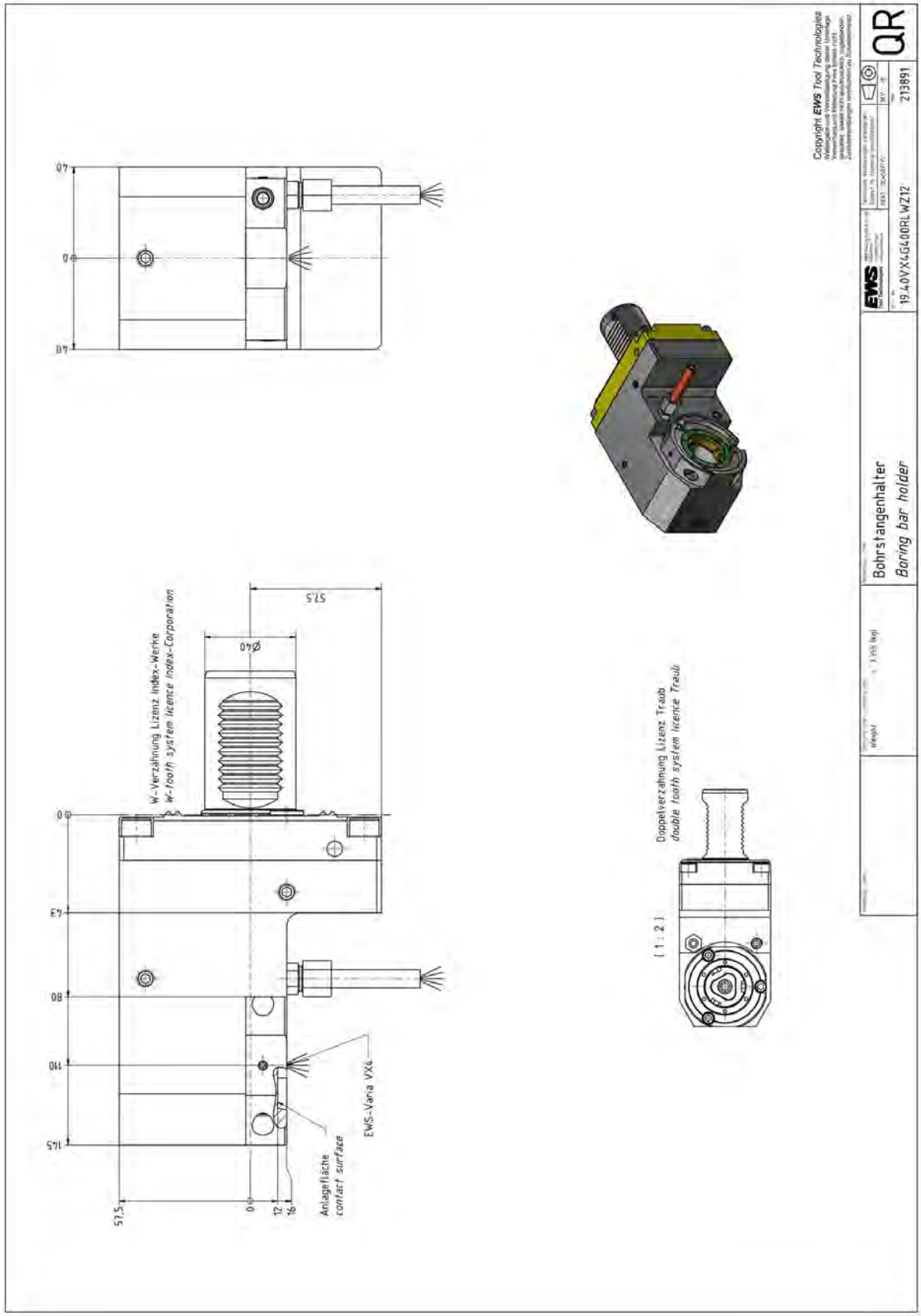

Boring bar holder

Pos.: 31
MNR: 209239
KTXT: 19.40VX4-ZYL

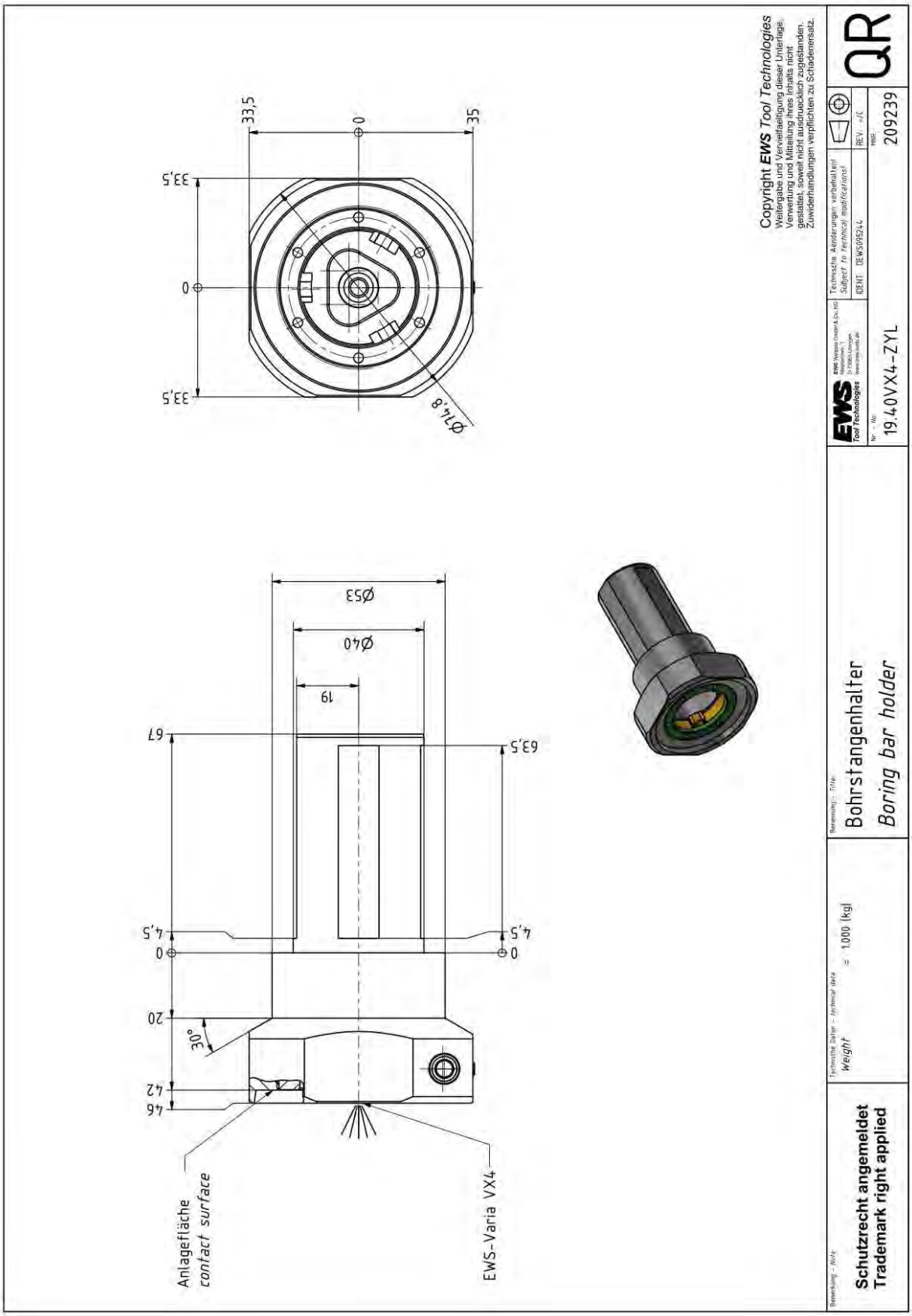

Axial drilling and milling head

Pos.: 40
MNR: 214142
KTXT: 40.40VX4KRG250IKCW

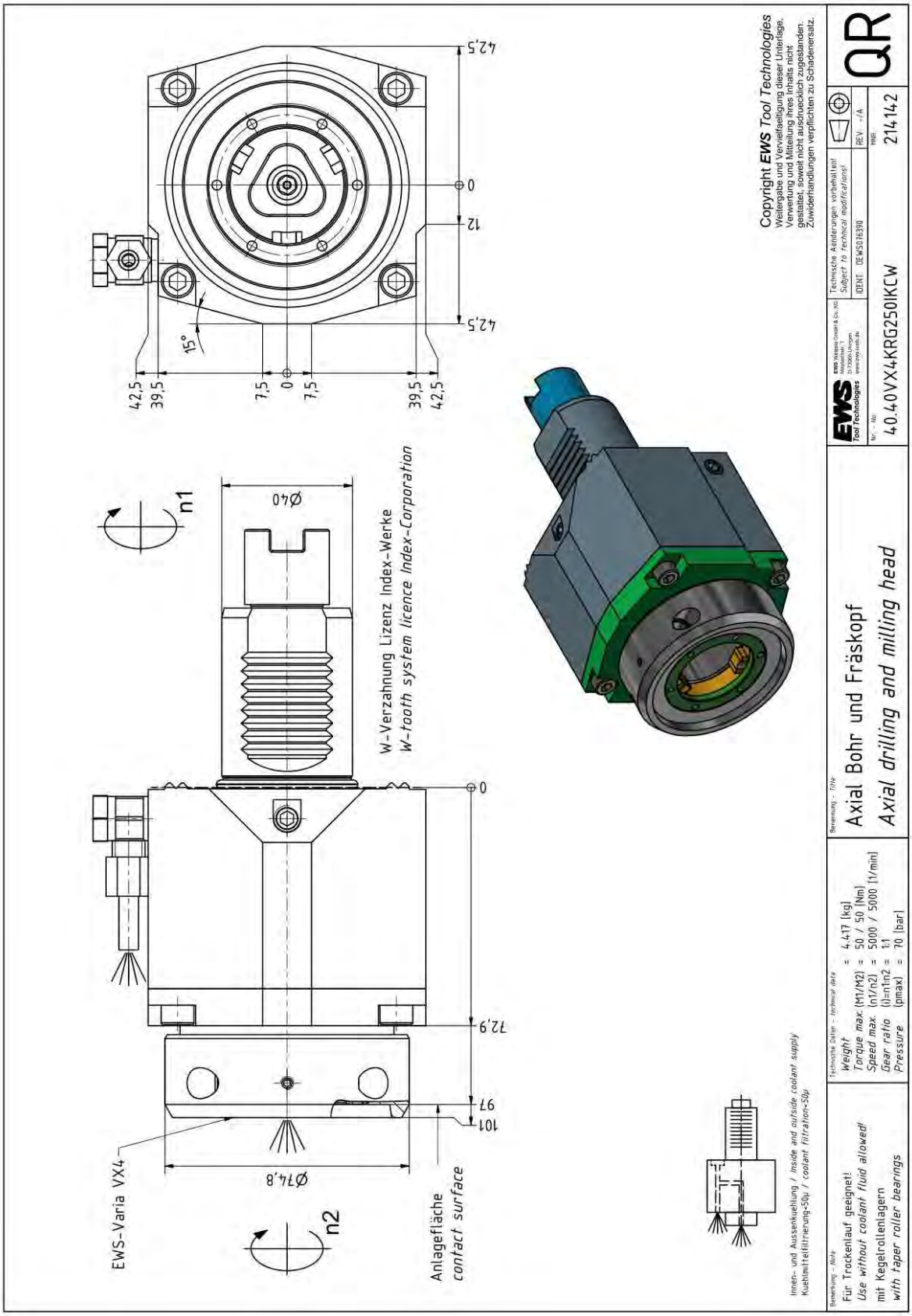

Axial drilling and milling head

Pos.: 41
MNR: 212687
KTXT: 40.40VX4KRG250IKC

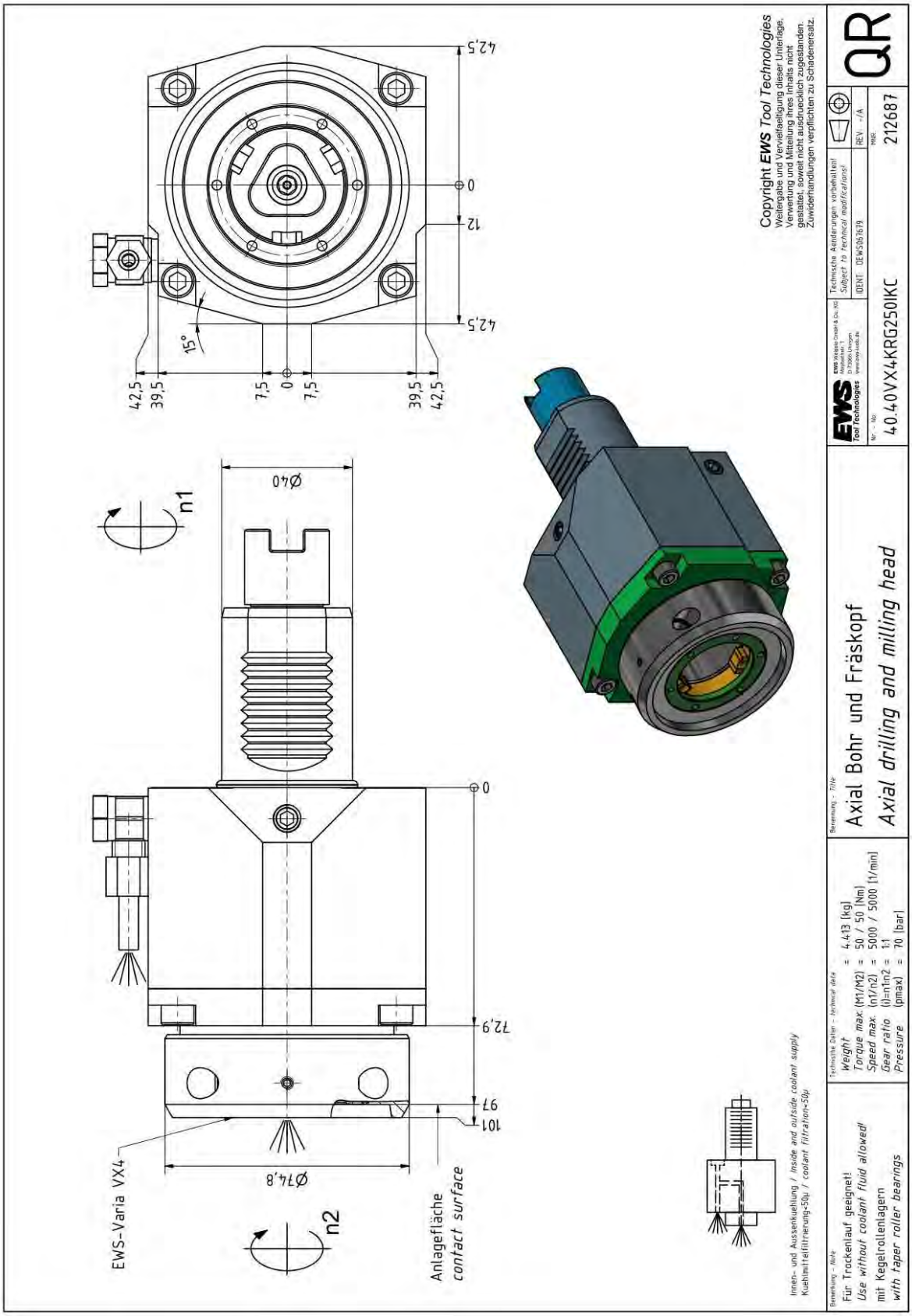

Ax. drill. and mill. head offset

Pos.: 42
MNR: 209449
KTXT: 50.40VX4G250RLIKDI1W

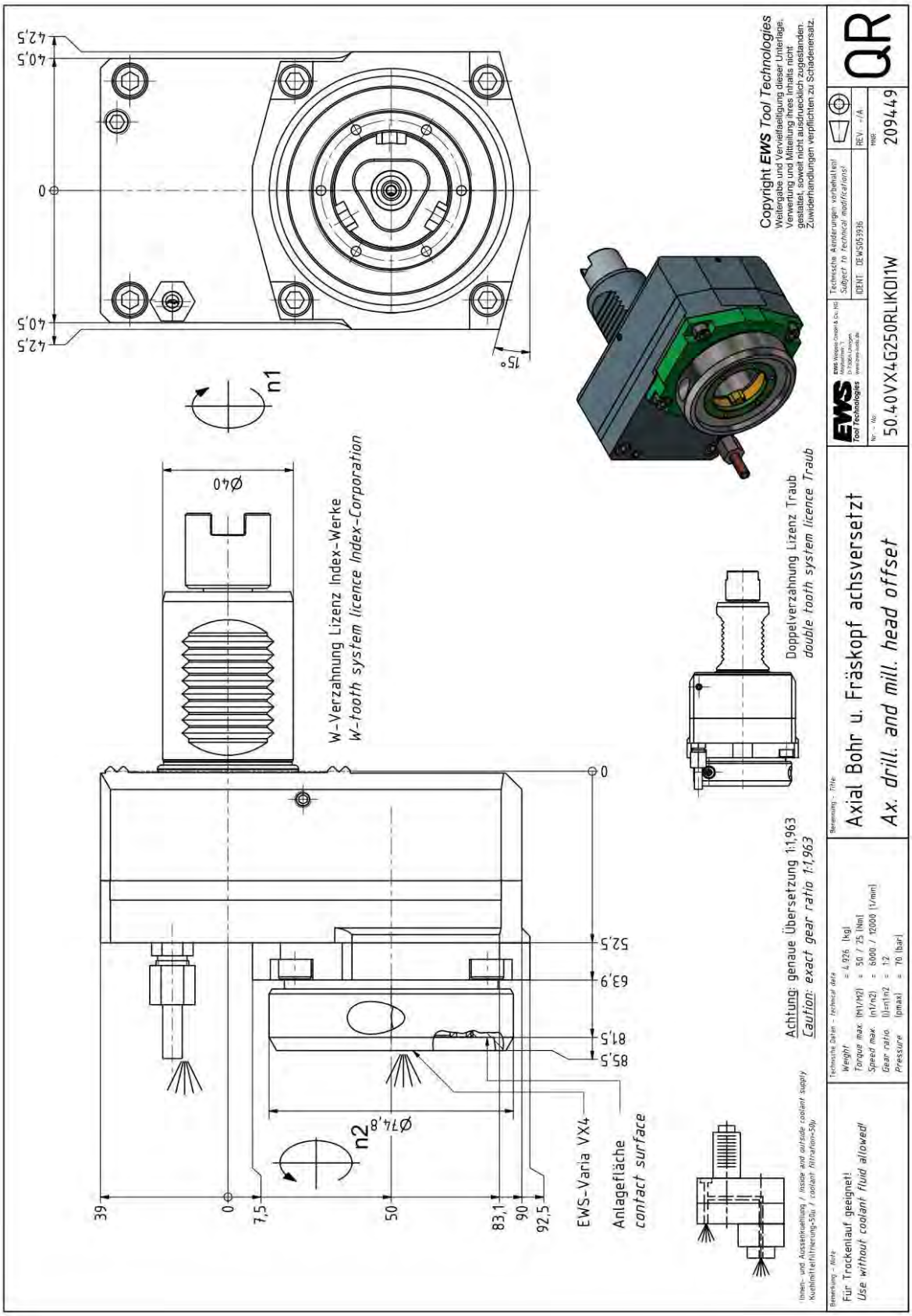

Radial drill. and mill. head offset

Pos.: 43
MNR: 216744
KTXT: 80.40VX4KRG250RLIKDWX110

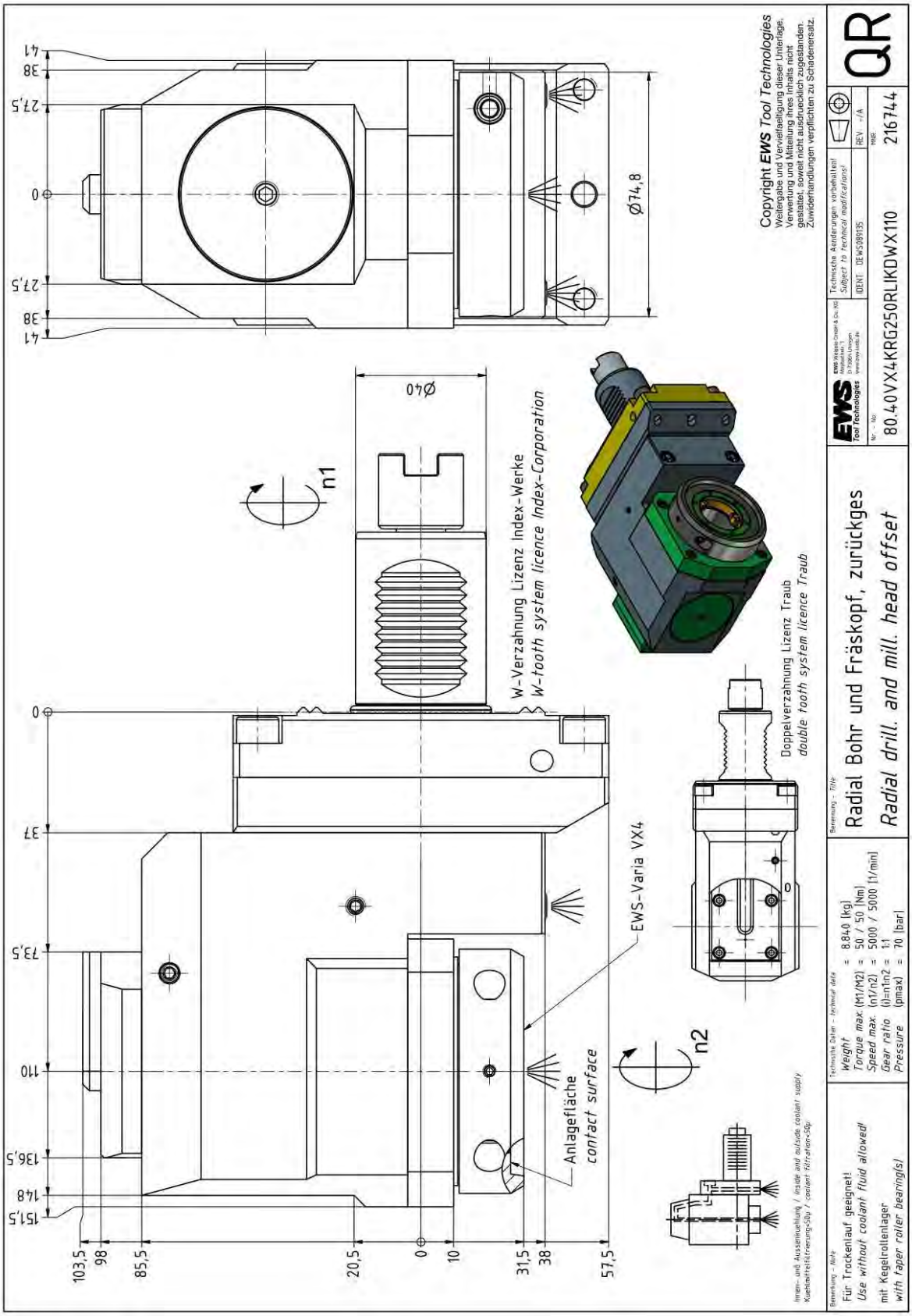

Radial drilling and milling head

Pos.: 44
MNR: 212692
KTXT: 60.40VX4KRG250RLIKDWX110

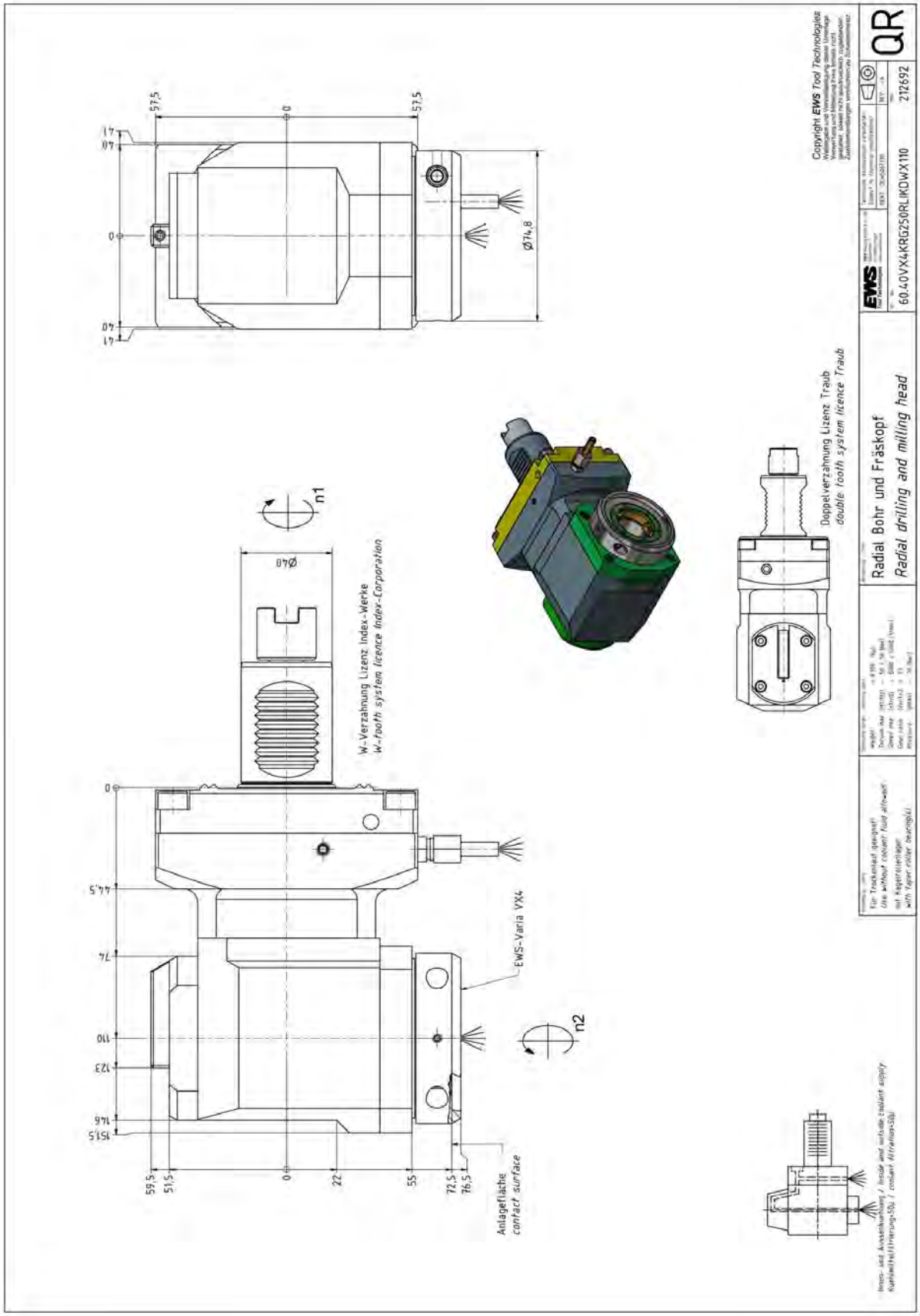

Axial drilling and milling head

Pos.: 50
MNR: 125441
KTXT: 40.4032G250IK

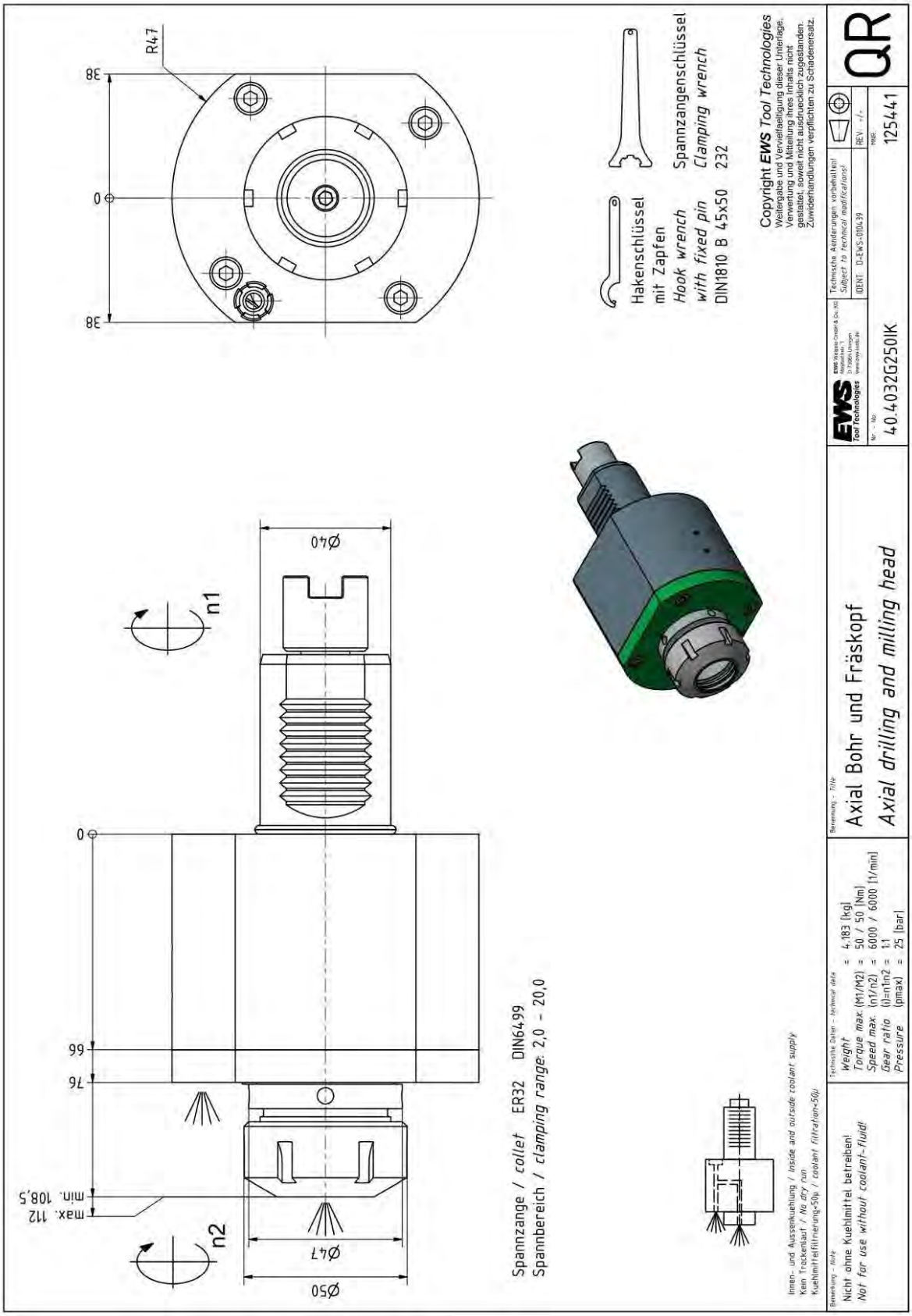

Radial drilling and milling head

Pos.: 51
MNR: 208319
KTXT: 60.4032G250RLIKDWX110

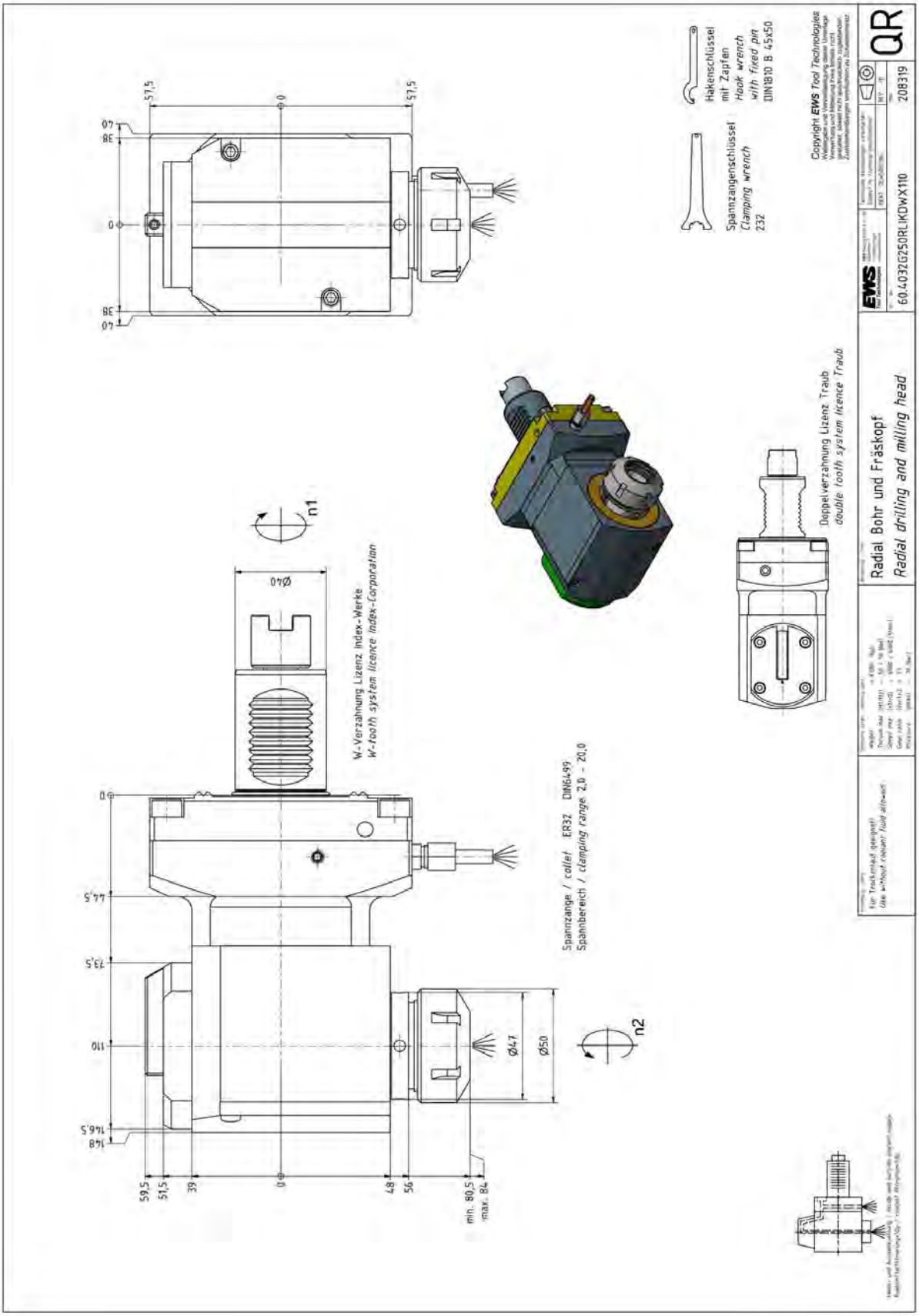

Swivel head

Pos.: 60
MNR: 188420
KTXT: 63.4025G250RLIKDW

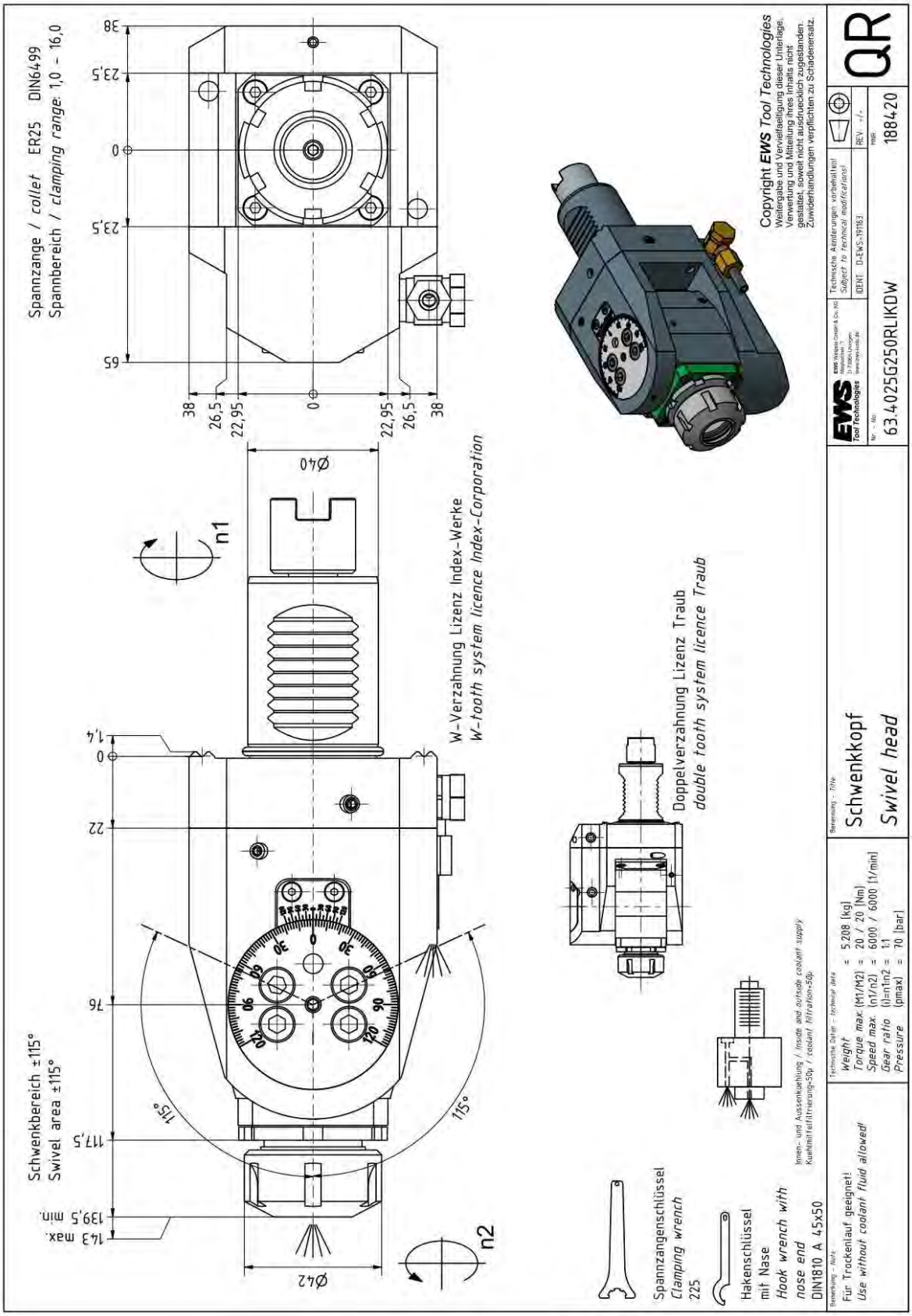

Swivel head

Pos.: 61
MNR: 139978
KTXT: 63.4025G250RLW

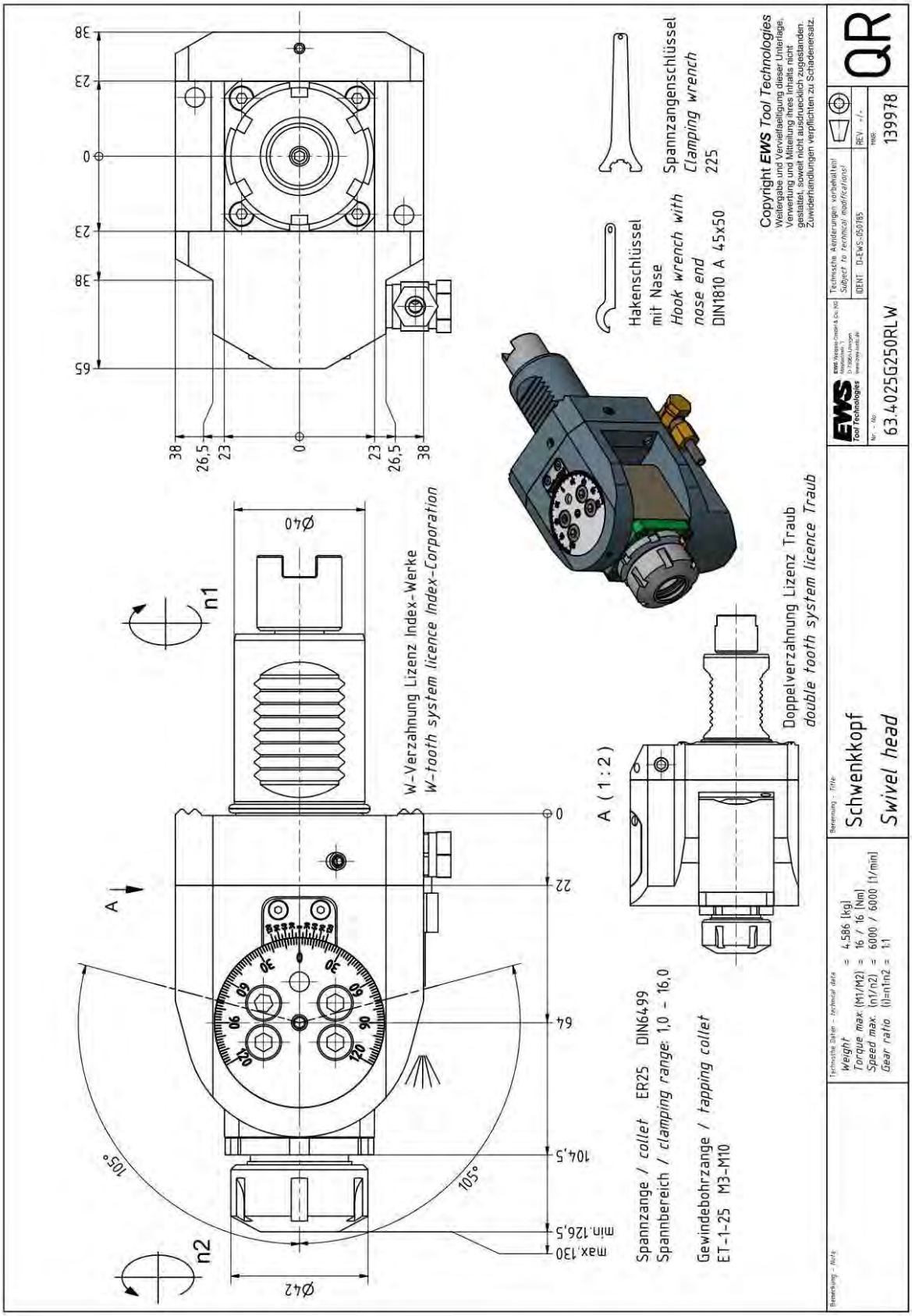

EWS Weigele GmbH & Co. KG
Maybachstraße 1 · D-73066 Uhingen
Telefon +49(0)7161-93040-100
Telefax +49(0)7161-93040-30
E-Mail info@ews-tools.de
www.ews-tools.de

EWS Korea Co. Ltd.
80-101, Golden root-ro,
Juchon-myeon, Gimhae-si,
Gyeongsangnam-do, Korea
Telefon +82 55-267-8085
Telefax +82 55-262-3118
E-Mail info@ewskorea.co.kr
www.ewskorea.co.kr

EWS Tutucu Sistemleri ve Taretleri Anonim Şirket
Aydınlı mah.Melodi No.2/19 Sk. Bilmo San.Sit. 18-19
34956 Tuzla / Istanbul
Turkey
Telefon +90-216-593-22-44
E-Mail mehmet@ewstools.com
www.ews-tools.de

埃维斯刀座技术(太仓)

EWS Tool Holder Technologies (Taicang Co. Ltd)
Beijing East Road No. 88
215400 Taicang · Jiangsu
P. R. China
Telefon +86 512 3306 2600
Telefax +86 512 3306 2601
E-Mail sales.cnews-tools.de
www.ews-tools.cn

Command Tooling Systems
13931 Sunfish Lake Blvd NW
Ramsey · MN 55303 USA
Telefon +1-763-576-6910
Telefax +1-763-576-6911
E-Mail support@commandtool.com
www.commandtool.com

Stand / updated: 09/2022